A 6T1C dynamic threshold voltage compensation IGZO-GOA circuit for 31-inch AMOLED display with slim border

Yan Xue*,**,***, Baixiang Han*,**, Xian Wang*,**, Shuai Zhou*,**, Gary Chaw*,**, Chun-Hsiung Fang*,**, Yuan-Chun Wu*,**
*Shenzhen china star optoelectronics semiconductor display technology Co., Ltd
**National Engineering Laboratory for AMOLED Process Technology
***School of electronic and computer engineering, Peking University, Shenzhen China

Keywords: 31-inch AMOLED display; GOA; slim border; Vth compensation

ABSTRACT

A simple 6T1C gate driver on array (GOA) circuit has been proposed to reduce border with in displays. In this circuit, the lifetime of GOA can be improved by introducing a dynamic Vth compensation system. Finally, the GOA circuit was placed in a 31-inch AMOLED display to testify the function

1. INTRODUCTION

Gate driver on array (GOA) has become a main driving technique instead of gate IC because it offers narrow bezel and low cost for displays [1~3]. It is well known that three well established thin-film transistors (TFTs) structures have been explored for display manufacturing, i.e., amorphous silicon (a-si) TFTs [4], low temperature poly-Si (LTPS) TFTs [5] and amorphous indium-gallium-zinc oxide (a-IGZO) TFTs [6]. Researchers focus on the development of a-si GOA circuit since 2010 and the a-Si GOA technology has been well utilized in LCD displays. For example, J. W. Choi .*et al*. have proposed a 10T1C GOA circuit which was widely used in LCD displays [7]. C. L. Lin. et al. have develop a 12T2C a-Si in-cell GOA circuit in their 5.46-inch LCD display [8]. It is well known that the mobility is as high as 100cm^2/V.s for LTPS TFT and the TFT stability is much better than a-si TFT. As a result, the TFT number in LTPS-GOA circuit is fewer than those in a-si GOA circuit.

A-IGZO TFTs have exhibit the advantages of high mobility, well stability and excellent uniformity over large-scale in array glassed. Therefore, a-IGZO technology is widely used in AMOLED TVs. However, a-IGZO TFTs often act as depletion-mode device with negative initial subthreshold voltage (Vth). It should be noted that some structures, such as series two transistors structure (STT) and dual low power system (Dual-VGL), are widely used to reduce leakage current from TFTs. Therefore, IGZO-GOA circuit is much more complicated than a-Si GOA and LTPS-GOA circuit. In our earlier research, a 18T1C IGZO-GOA circuit has been introduced for AMOLED display and the GOA width is 6mm [9]. It should be noted that an additional 4mm encapsulation area is needed for display. As a result, it is difficult for this display to obtain a narrow bezel.

In this work, we design a simple 6T1C GOA circuit for a 31-inch AMOLED TV without STT or dual-VGL structure. There, the width of GOA layout is only 1mm and the bezel of display is 5mm. It should be mentioned that a Vth compensation system has been introduced for GOA circuit. The working mode of GOA can be changed from depletion mode to enhancement mode with this system. Therefore, the malfunction of GOA would not take place. Finally, we demonstrated a 31-inch AMOLED display with a resolution of FHD (1920×1080) to testify the function

2. TFT INTRODUCTION

In our early research, top gate (TG) TFTs have been designed for GOA circuits. The cross-sectional diagram of TG-TFT is demonstrated in Fig.1a. The function of GOA is largely depend on the TFT performance. In this work, a promising dual-gate TFT structure, which can be seen in Fig.1b, has been designed and proposed for GOA circuits. An additional bottom gate has been used in this research. This structure can not only prevent the irradiation of light from bottom side, but the vth of TFT can be controlled by the bottom gate. The top gate of TFTs are connected to the internal GOA circuit, while the bottom gates are connected to external DC source. Therefore, the working mode can be changed from depletion mode to enhancement mode by changing the voltage of bottom gate.

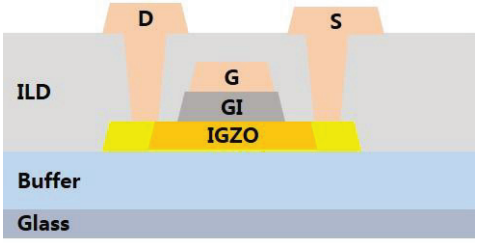

(a)

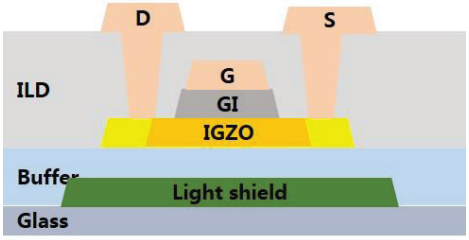

(b)

Fig.1. Cross-sectional diagram of (a) traditional TFT structure; (b) dual-gate TFT structure

To testify the function, Keithley-4200 is performed to study the TFT characterization. The channel width and length are 2560μm and 8μm, respectively. Fig. 2 shows the effect of light shield voltage (VLS) on Vth. Obviously, vth can be linearly changed from 9V to -4V when VLS voltage varies from -15V to 15V.

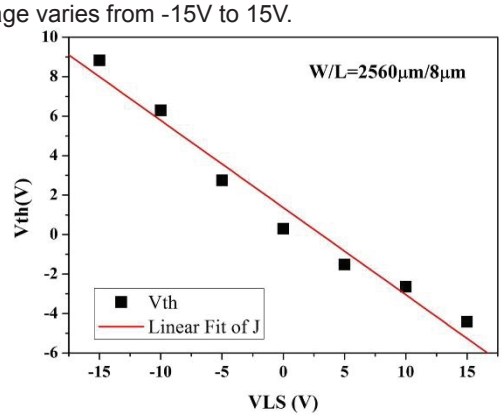

Fig.2. The effect of VLS on vth in TFTs

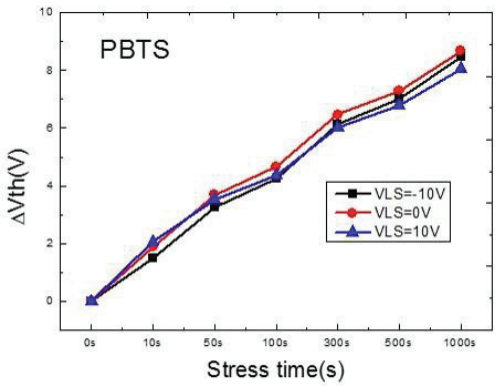

(a)

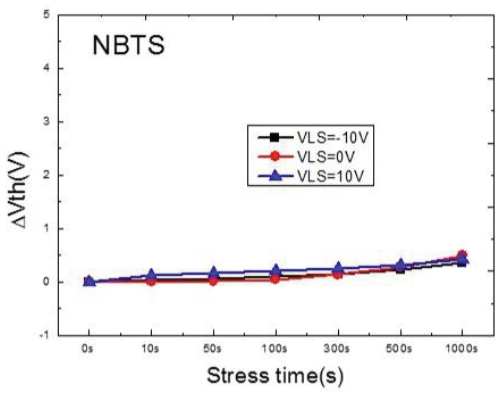

(b)

Fig.3. The ΔV of PBTS and NBTIS with different VLS voltage

Fig. 3 summarize the Vth shift after 1000s positive bias temperature stress (PBTS) and negative bias stress temperature and irradiation stress (NBTiS) with the bottom VLS voltage of -10V, 0V and 10V. It can be seen that both the negative and positive VLS stress results in positive transfer shift. Meanwhile, the vth shifts also toward positive direction under NBTIS.

3. GOA CIRCUITS

In our early research, a complex 18T1C GOA circuit has been introduced [1], shown in Fig.4a. It can be concluded that it is difficult for this circuit to obtain a narrow bezel. Fig.4b exhibits the schematic of convenient GOA circuit with traditional top gate TFT structure, which is composed of a pull-up (T2), pull-up control (T1), reverse (T31, T32), pull-down holding (T41, T42) and a bootstrap capacitor (Cbt). We apply the dual-gate TFT structure in this convenient GOA circuit, which is seen in Fig. 4c. It should be noted that TFTs suffer from different stress condition in circuits. Therefore, the bottom gates of TFTs in pull-up, pull-up control, reverse and pull-down holding units were connected to different external DC source.

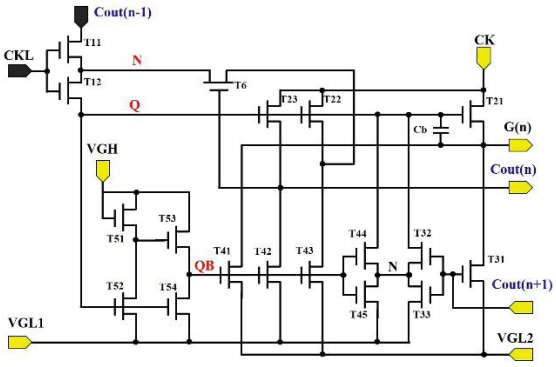

(a)

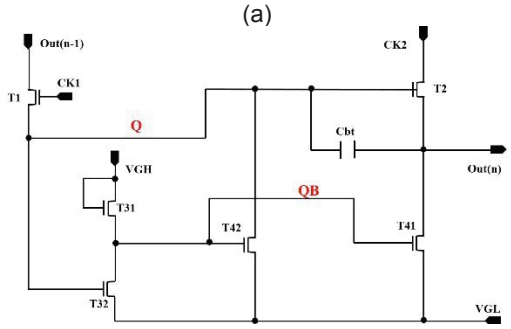

(b)

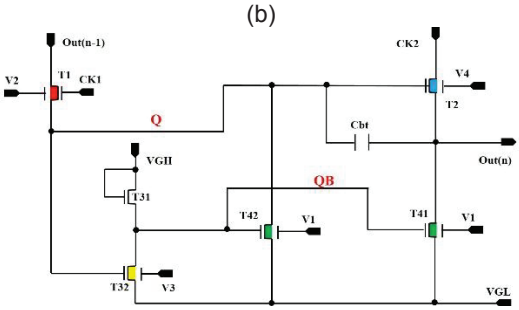

(c)

Fig.4. Schematic diagram of (a) Our earlier GOA circuit; (b)traditional 6T1C GOA circuit; (c) novel 6T1C GOA circuit

It should be pointed out that a gate pulse of 3.6ms is required for OLED external compensation technology. Therefore, node Q must maintain a high voltage during GOA programming stage. The initial vth of TFT is -1.2V.

The output of 6T1C GOA circuit (VLS=0) is shown in Fig.5a. Obviously, the malfunction of GOA has taken place and a pulse width of 3.6ms can not be obtained. In our novel GOA circuit, we decrease the voltage to -10V. According to the curve in Fig.2, the vth is 1.8V with VLS=10V. The working mode of TFT changes from depletion mode to enhancement mode and the output of GOA with vth compensation system can be seen in Fig.5b. We can see that a width pulse is obtained.

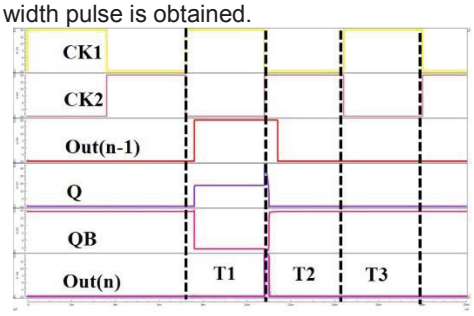

(a)

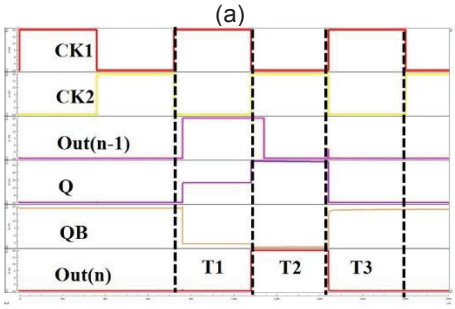

(b)

Fig.5. The ΔV of PBTS and NBTIS with different VLS voltage

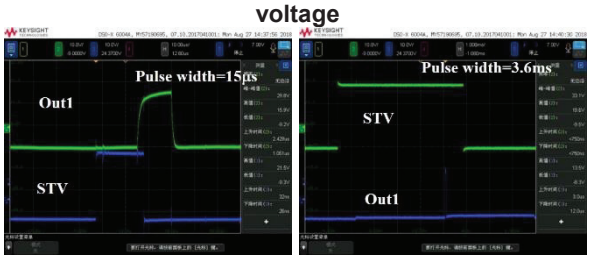

(a) (b)

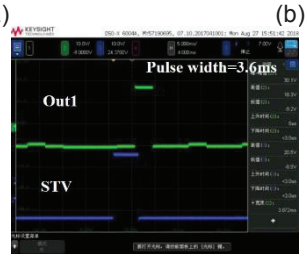

(c)

Fig.6. Measured output waveforms of the proposed gate driver with pulse width of (a)15μm; (b) 3.6ms (VLS=0V); (c)3.6ms (T1/T42 VLS=-10V)

Fig.6a displays the measured 1st output waveform of gate driver with CK pulse width of 15μs. The initial VLS voltage is set to-10V. It can be seen that a high quality pulse width can be obtained. When the display is turned off, the pulse width of CK and STV are transferred to 3.6ms. The malfunction of GOA has taken place, shown in Fig.6b.

When the VLS voltage of T1/T42 is set to -10V, the working mode of T1 and T42 is changed to enhancement mode. Finally, the leakage current of node Q is reduced and a wide pulse can be obtained.

4. AMOELD DISPLAY

Fig.7a shows the border width with 18T1C GOA circuit. It can be seen that the total border width is rather wide with 10mm bezel. By the utilization of 6T1C GOA circuit the border width is reduced to 5mm. Fig.8 exhibits a photograph of convenient AMOLED display structure. GOA circuit is placed symmetrically in the normal direction of this display. Fig.9 shows a photograph of display image and the specification of this display has been listed in Table.1. It should be noted that more work is needed to testify the reliability of this pixel structure and the specification of this display has been listed in Table 1

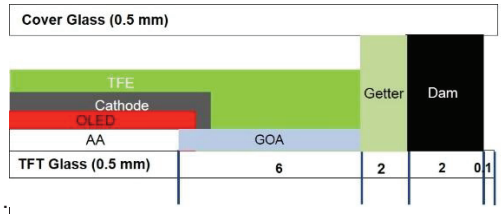

(a)

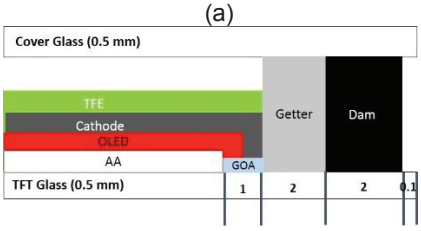

(b)

Fig.7. The border width of AMOLED display with (a) 18T1C GOA; (b) 6T1C GOA

Fig.8. Panel outline of the AMOLED display

Fig.9. A photograph of this 31-inch AMOLED display driven by GOA

Table 1. Specifications of 31-inch AMOLED display

Items	Specification
Display size	31inch
Border width	5mm for 3 sides
Frame Rate	60HZ
Resolution	FHD(1920×RGBW×1080)
Driver	GOA
TFT device	TG-IGZO
OLED device	BYYB
NTSC	87.2%

5. CONCLUSIONS

We have demonstrated a 6T1C GOA circuit for a 31-inch AMOLED display. In this circuit, the working mode of TFTs can be changed from depletion mode to enhancement mode by the utilization of a dynamic vth compensation system. Therefore, a wide pulse of 3.6ms in GOA circuit is obtained. Finally, the circuit was utilized to drive a 31-inch AMOLED display. This display shows a photograph with high quality with a border width of 5mm

ACKNOWLEDGMENTS

We gratefully acknowledge the support of the Shenzhen peacock plan and national engineering laboratory for AMOLED process technology for this work. This research is also partially supported by the China Postdoctoral Science Foundation (2019M650341)

REFERENCES

[1] Y. Xue, C. H. Fang, B. X.Han, A. G. Tu, Z. G. Yang, G. Chaw, C. W. Liao, S. D Zhang, Y. C. Wu, “Panel design technology for a 31-inch GOA drived AMOLED display with BYYB OLED structure and slim border”, SID 60-2, PP846-849 (2019)

[2] Y. C. Wu, Y. Xue, B. X. Han, G. Chaw, Z. G. Lin, Y. J. Hsu, J. H. Fu, T. J. Hwang, P. Y. Lu, “Design of an advanced bottom-emission AMOLED display for TVs with high ppi and large size”, SID 67-1, PP941-944 (2019)

[3] Y. Xue, B. Han, C. Nie, G. Chaw, “GOA drived 31-inch AMOLED display with 3mm border”, IDW AMDp2-14L, PP409-412 (2018)

[4] W. Y. Li, Y. F. Chou, J. Zhu, W. Shao, L. Q. Shi, W. Cao, C. Y. Chiu, “Design of highly reliable a-si gate driving circuit for 32inch SNB TFT-LCD panel”, IDW DESp1-4, PP1455-1458 (2018)

[5] C. C. Lee, H. P. chung, C. C. Chiu, C. C. Pai, M. S. Chen, W. M. Huang, “An ultra-narrow border of in-cell touch TFT-LCD by using TGP and OTSD technology with new S/R circuit”, SID 9-1, PP95-97 (2017)

[6] Y. Xue, B. Han, Y. Huang, L. Zhang, X. Wang, S. Zhou, X. Xiao, G. Chaw, C. Liao, S. Zhang, “The design of a 15-inch AMOLED display derived by GOA”, CAD-TFT (2018) DOI 10.1109CAD-TFT.2018.8608115,

[7] J. W. Choi, J. I. Kim, S. H. Kim, J. Jang, “Highly reliable amorphous silicon gate driver using stable center-offset thin-film transistors”, IEEE. Transactions. On. Electron Device. 57(9) PP2330-2334,2010

[8] C. L. Lin, P. C. Lai, P. C. Lai, T. C. Chu, C. L. Lee, “Bidirectional gate driver circuit using re-charging and time division driving scheme for in-cell touch LCDs”, IEEE. Transactions on industrial electronics. DOI 10.1109/TIE.2017.2756583,

[9] B. Han, Y. Xue, Y. Huang, L. Zhang, X. Xiao, X. Zhang, G. Chaw, C. Liao, S. Zhang, “Design of a IGZO TFT-based GOA circuit for external compensation pixel circuits. DOI 10.1109CAD-TFT.2018.8608048