The 10th JFPS International Symposium on Fluid Power FUKUOKA 2017 Oct. 24-27, 2017 The Japan Fluid Power System Society

POWER MATCHING AND WORKING PERFORMANCE OF HYDRAULIC EXCAVATOR DRIVEN BY VARIABLE SPEED ELECTRIC MOTOR

Lei GE, Long QUAN*, Jing Yang, Bin ZHAO, Youshan Gao, Zhen LU

*Key Lab of Advanced Transducers and Intelligent Control System of Ministry of Education, Taiyuan University of Technology,
Taiyuan, P.R.China
(E-mail: quanlong@tyut.edu.cn)

Abstract. Mobile machinery energy efficiency and emission pollution are the national and worldwide issues. This paper contributes in solving these problems by applying a power source with displacement variable pump driven by a frequency conversion motor. Unfortunately, almost all of the speed variable systems have the dynamic response problem when the motor starts with full load or heavy load. To address this problem, a matching method based on the segmented speed and continuous displacement control of the pump is proposed to improve the energy efficiency and dynamic performance simultaneously under different working conditions. And then, an independent metering in and metering out system is used to reduce the throttling loss. Firstly, a test system is established to study the dynamic performance and energy efficiency of the speed variable power source. Working performance and energy consumption of the power source under different rotating speeds and different loads are studied. And then, the hydraulic excavator test rig with the proposed system is constructed. Furthermore, the working performance of the excavator with the speed-fixed and speed-variable strategy are studied comparatively. Results show that, compared with fixed-speed strategy, the electric power consumption during the idle period and partial load condition can be reduce about 2.05 kW and 1.37 kW. The energy efficiency of speed variable power source is about 40%-71%, which is higher than that of the fixed-speed power source by 3-10%.

Keywords: Hydraulic excavator, Power matching, Speed variable, Electro hydraulic power source

INTRODUCTION

Nowadays hydraulic excavator is widely used in construction field, due to their small size-to power ratio, compact structure and big actuation forces. In the excavator, a variable pump driven by internal-combustion engine is normally applied as power source to supply high pressure oil, and the four-sides spool valves are used to control the actuators. Studies [1] have shown that the energy efficiency of the pump is about 87%, the efficiency of hydraulic control system is only 30%, the efficiency of the mechanical system is about 90%, thus the energy consumption for working is only 23% of the engine output. Besides, the average energy efficiency of the engine is only about 35%, the energy efficiency of the whole machine is very low and there is serious emission pollution [2-3]. Thus, improving the energy efficiency and reducing emission have been the research focuses in this field.

Considering the energy transfer chain, there are two ways to improve the energy efficiency of hydraulic excavator: one is to improve load-engine matching performance, another is to reduce the throttling loss.

In the conventional excavator system, the operating point of its engine should meet the needs of load power, which varies widely. Thus, the engine often works under partial load condition, during which the energy efficiency is low. Many research efforts on these issues of the excavator have been undertaken. A conventional way to improve the engine efficiency is adjusting the engine speed according to load condition [4]. The other way is the diesel engine cylinder deactivation technology [5]. However, these two ways can only improve the economy of diesel engine in light load. A way to global improve the engine efficiency is adding an auxiliary power unit to the system, such as hydraulic pump / motor or electric motor / generator, called hybrid technology, which can downsize the engine power also [6-10].

In mobile fluid power systems, several actuators are connected to one common pump. The pressure level and flow demand of one actuator will normally vary considerably during a duty cycle. One obvious way of meeting the demand of energy efficiency is to make use of load sensing, negative control and positive control technology [11-13]. However, in these systems, a four-side spool valve is used to control the actuator, which causes large throttling loss. Some theses attempt to deal with this problem by using an independent metering in and metering out system for controlling the excavator hydraulic actuators. And this is also one of the research hotspots in valve controlled systems [14-15].

Although many technologies have been made to improve the energy efficiency of the hydraulic excavator, such as hybrid technology. However, this is not the eventual solution. Just like the development of the automotive

industry, the development direction of construction machinery is also pure electric drive to eliminate emissions completely. This paper proposes an advanced construction machine named electric excavator, in which a frequency conversion electric motor is used to driven a displacement variable pump. As a certain operation point can be supplied by different combinations of drive speed and pump displacement, intelligent control strategies can address major issues like energy efficiency, process dynamics and noise level in hydraulic excavators [16-19]. In this paper, a control method based on the segmented speed and continuous displacement control of the pump is proposed to improve the energy efficiency and dynamic performance simultaneously under different working conditions. Furthermore, an independent metering in and metering out system is used to reduce throttling loss.
The paper is organized as follows. Section II presents the structure and principle of the electric excavator system with independent metering in and metering out system. The dynamic performance and energy consumption characteristic of power source which consists of speed variable electric motor and displacement variable pump based on mathematical model and experiment results in section III. Section IV concentrates on the controller design. Section V provides the experimental results. Finally, conclusions are drawn in Section VI.

PRINCIPLE OF HYDRAULIC EXCAVATOR

Hydraulic excavator is a typical multiple actuators construction machine, which has 6 actuators, e.g. swing, boom, arm, bucket, left and right travelers. In this paper, the boom, arm and bucket cylinders are selected to validate the proposed system. Fig.1 gives the principle of electric excavator with independent metering in and metering out system proposed in this paper.

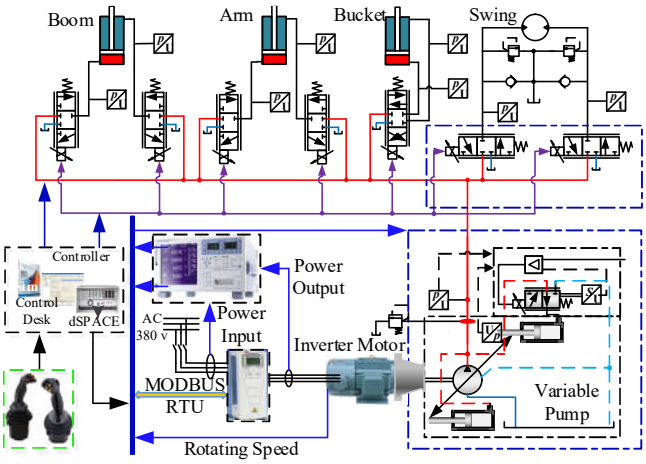

FIGURE 1. Working principle of electric excavator

As shown in Fig.1, the system is composed of an electro-hydraulic power source and independent metering in and metering out system. The electro-hydraulic power source consists of a converter electric motor and a displacement variable pump which the pressure and flow can be continuously tunable. And also, the boom cylinder, arm cylinder, bucket cylinder and swing motor are controlled by independent metering in and metering out system. There are additional instruments such as displacement sensors in the actuators, pressure sensors installed to detect the pressure inside the actuators and pump port, the power sensor and rotating speed sensor on the motor to detect the electric power and rotating speed. The circuit control concepts are being realized by the hardware in the loop computer control system ds1103.
The core of the research work is to improve the energy efficiency of the power source and to reduce the throttling loss of hydraulic system, under the premise of ensuring dynamic characteristics. In the following, these two sections are described in detail.

DYNAMIC RESPONSE AND ENERGY EFFICIENCY OF ELECTRO-HYDRAULIC POWER SOURCE

The degree of freedom of speed and displacement variable pumps can be used to adjust the operation points of the electric drive and the hydraulic pump to maximize the overall energy efficiency. And the process dynamics is determined by the electric motor and pump.

3.1 Dynamic Response

(1) Dynamic response of electro-hydraulic power source

When the load condition and power supply capability are taken into account, it is difficult to describe the dynamic response of the electro-hydraulic power source. Thus, a test system is constructed to study the dynamic characteristic of the electro-hydraulic power source, as shown in Fig.1.
Speed variable power source often start with heavy load, and sometimes its dynamic response may not meet the system requirements. With the system shown in Fig.1, the dynamic characteristics of the power source under different load condition are studied. The flow output of pump is detected to characterize the dynamic response.
During test process, the initial motor speed is set as 0 r/min, and the maximum starting current of the motor can be limited by the inverter. The pump pressure setting is set as 25 MPa under which the pump will working at the maximum displacement. And the load pressure controlled by the relief valve is set as 0 MPa, 6 MPa, 12 MPa, 18 MPa. The speed control signal is set as 10 V by the step signal, at 1 s. The results are shown in Fig.2.
As shown in Fig.2A, under rated current of the motor, with the increase of the load pressure, the starting time of the electro-hydraulic power source becomes longer, but the braking time becomes shorter. When the load pressures are 0 MPa and 18 MPa, the starting times are about 0.58 s and 1.43 s, and braking times are about 2.62 s and 0.66 s. As shown in Fig.3B, when the maximum starting current is set as 1.5 times of the rated current, the increasing of the load pressure has less influence on the dynamic characteristics. And the starting time can meet the requirement of the excavator.

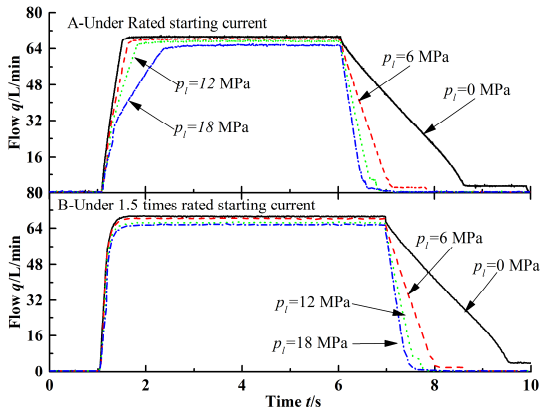

FIGURE 2. Starting and braking characteristics of the electro-hydraulic power source

(2) Dynamic Characteristics of Pump
The dynamic characteristics test of the electrohydraulic displacement variable pump is conducted under a rotating speed of 1500 rpm and volume for 1 L. Fig.3 gives the dynamic response of the pump when the pump is set as a flow control model. The response time is 70 ms for 100% signals up and 29 ms for down. It can be concluded that the results show the hydraulic pump has quicker dynamic response than electric motor. Thus, its dynamic characteristic can be ignored in the electro-hydraulic power source.

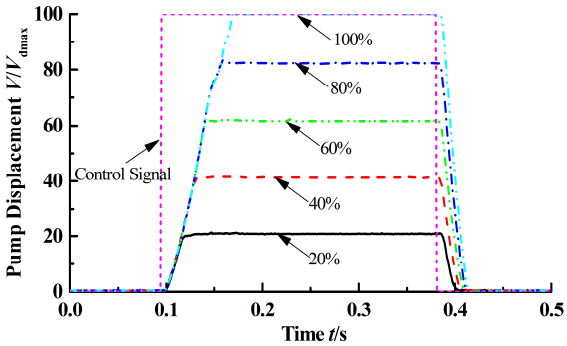

FIGURE.3 Pump displacement response

3.2 Energy Efficiency of the Electro-Hydraulic Power Source

During the working process of electro-hydraulic power source, the energy conversion process of power source system is about frequency converter-electric motor-pump. The conversion efficiency of each stage has an impact on the efficiency of the power source. Generally, the energy efficiency of the inverter is about 95%. The energy efficiency of electric motor is affected by load and rotating speed which is about 90% under rated load and speed, and under partial load condition it would be less than 40%.
(1) Electric motor
The electric motor losses consist copper, iron and mechanical losses. The copper losses are mainly caused by the ohmic resistance of the copper coils, and it is affected by the load and current, and it can be written as Eq.(1).

$$\Delta P_{Cu} = mI^2R \tag{1}$$

Where m is motor phase number, I is phase current, R is ohmic resistance of the copper coils.
The iron losses are mainly caused by magnetizing losses and eddy-current losses in the stator, it can be written as Eq. (2).

$$\Delta P_{Fe} = \Delta P_{Fe1} + \Delta P_{Fe2} = k_1 f_1 B^2 + k_2 f_1^2 B^2 \tag{2}$$

Where ΔP_{Fe1} is magnetizing losses, ΔP_{Fe2} is eddy-current losses, k_1, k_2 are the iron losses coefficients, f_1 is the flux frequency, B is flux density.
Mechanical losses are mainly friction losses and cooling, it can be written as Eq. (3).

$$\Delta P_m = \Delta P_f + \Delta P_{fan} \tag{3}$$

Where ΔP_f is friction losses, ΔP_{fan} wind pressure of the fan.
Assuming that the output power of electric motor is P_2, the energy efficiency of the motor can be written as Eq.(4).

$$\eta = \frac{P_2}{P_2 + \Delta P_{Fe} + \Delta P_{Cu} + \Delta P_m + \Delta P_\Delta} \tag{4}$$

(2) Axial piston pump
The hydraulic pump losses consist volumetric and hydro-mechanical loss, and it can be written as Eq.5.

$$\eta_p = \eta_v \cdot \eta_m \tag{5}$$

The main parameters of hydraulic pump are torque, flow, power, and its efficiency can be described by speed n, pressure difference Δp, displacement factor β, function relationship between the two or three parameters. According to the literature, the experience calculation equation of the volumetric efficiency η_v and the mechanical efficiency η_m of the variable hydraulic pump can be written as Eqs.(6)-(7).

$$\eta_v = 1 - \frac{kC_s\Delta p}{\mu n \beta V_{max}} \tag{6}$$

$$\eta_m = \frac{1}{1 + \frac{\mu n C_s}{kC_V \Delta p \beta} + \frac{C_f}{\beta} + \frac{2\pi T_s}{\Delta p n \beta V_{max}}} \tag{7}$$

Where n is the rotating speed of pump, k is the scale coefficient, C_s is leakage coefficient, Δp pressure difference, μ is kinematic viscosity, C_V is resistance coefficient of laminar, C_f is mechanical resistance coefficient, T_s is the torque losses independent of speed and pressure difference.
According to Eq.(6), assuming that the pressure is certain, volumetric efficiency increases with speed and displacement. In application, it can be stated, that the volumetric efficiency is in relation to the output flow, that when the flow is certain, volumetric efficiency can be considered as constant. According to Eq.(7), when pressure is given, mechanical efficiency increases with pump displacement increasing and speed decreasing.
However, the pump efficiency is affected by its pressure, temperature, rotating speed, and so on. And also, it is difficult to forecast these parameters. Thus, currently many studies use the experimental results to study the pump efficiency. Fig.4 gives the overall efficiency of the pump varies with speed and displacement under 0.5 times rated pressure. It can be seen that, the overall efficiency increases with the output flow. And when the flow is given, changing the speed or displacement have less influence on the overall efficiency.

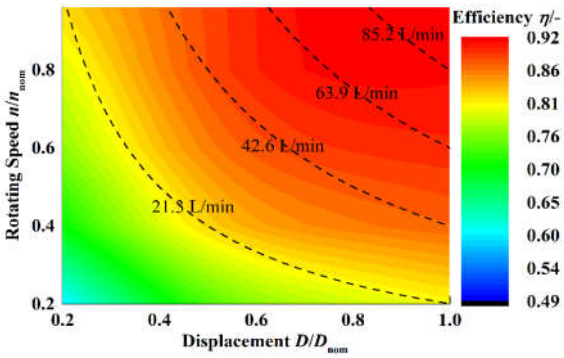

FIGURE 4. Overall efficiency of the pump

(3) Electro-hydraulic Power Source
In order to have a knowledge of the energy efficiency of the electro-hydraulic power source, it is tested based on the test system shown in Fig.1. In the test system, the rated nominal output power and speed of the used electric

motor are 37 kW and 1500 rpm. Fig.6 shows the energy efficiency map of the electro-hydraulic power source under different conditions.

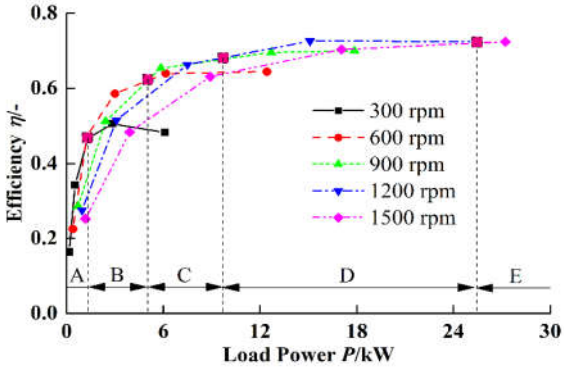

FIGURE 5. Efficiency map of electro-hydraulic power source

As shown in Fig.5, when the motor operates under partial load, especially lower than 20% of the rated load, its efficiency will drop obviously. Up than 30% of the rated load and 40% of the rated speed, the overall efficiency of the electro-hydraulic is about 70%. When the load power is less than 18 kW, the efficiency under a low speed is more than 15% of that when the speed is about 1500 rpm. An also, when the load power is in the intervals A, B, C, D and E, the high efficiency speeds are as follows:300, 600, 900, 1200 and 1500 rpm. Thus, we can conclude that when the motor works under partial load, especially lower than 20%, the low speed condition has a good efficiency.

CONTROL STRATEGY OF ELECTRIC EXCAVATOR

During the working process of the excavator, the operator gives the velocity control signal though the joystick, the swivel of the joystick is proportional to the velocity of the hydraulic actuator. If there is only one actuator, it is easy to realize the velocity control of the actuator by controlling the output flow of the pump. When there are more than one actuators working simultaneously, it is necessary to control the flow distribution ratio beside controlling the output flow of the pump. Thus, the control strategy of electric excavator consists of power source control and flow distribution modules, as shown in Fig.6.

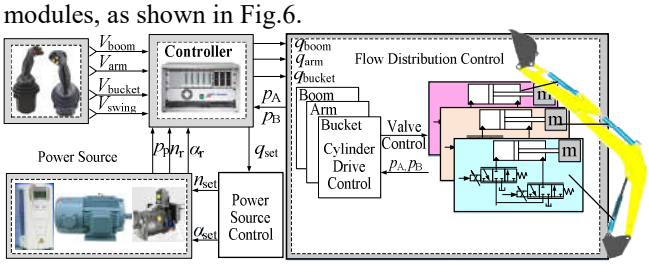

FIGURE 6. System architecture for excavator

4.1 Power Source Module

The power source module' job is to control the speed and displacement of the pump, according to the signal q_{dr}. The aim of this module is to ensure the dynamic performance while improving the energy efficiency and to reduce the operating costs. The control principle is that, while the flow changes rapidly is high, it is necessary to avoid changing the motor speed, and when the load power is relatively low, the speed motor is set as a low value to achieve a good efficiency. Thus, a matching method based on the segmented speed control and continuous displacement control of the pump is proposed, as shown in Fig.7.

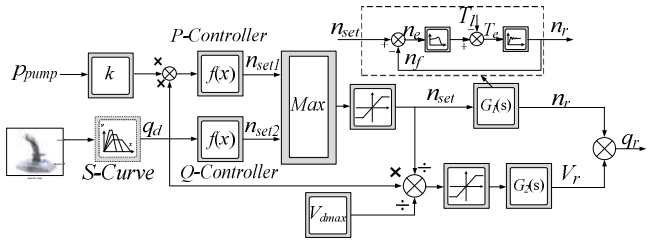

FIGURE 7. Coordinated control of rotational speed and displacement

As shown in Fig.8, according to q_d, the speed of the motor n_{set1} is calculated when the displacement of the pump is set as 80% rated displacement; and then according to q_d and the pump's outlet pressure p_p, the load power P_p can be calculated out, the table look up method is used to determine the speed n_{set2} under which the electro-hydraulic power source works under high efficiency; and then the maximum value of these two speed is chosen to control the motor.
When the speed of the motor is determined, the displacement of the pump can be calculated according to Eq. (8).

$$V = \frac{q_d}{n_{set}} \tag{8}$$

4.2 Flow Distribution Module

The flow distribution module' job is to distribute the output flow of the pump by changing the opening levels of control valves. The control principle is shown in Fig.8, which can also be seen in Ref.[19].

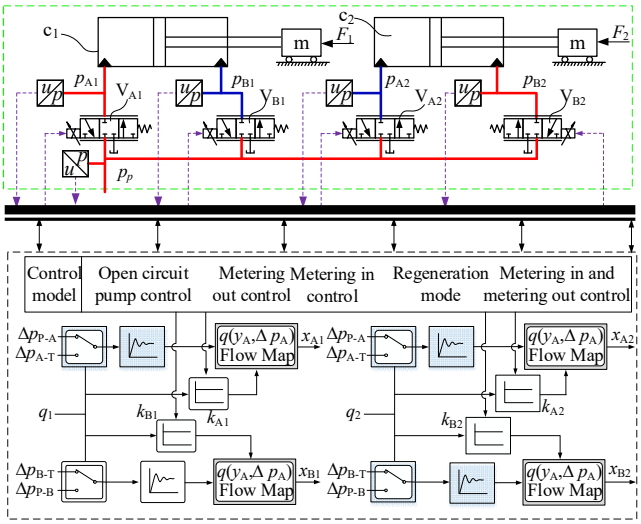

FIGURE 8. Flow distribution module

As shown in Fig.8, the control model can be divided into open circuit pump control, metering out control, metering in control, regeneration control and metering in and metering out control, according to the direction of the load and velocity. When the actuator works under resistance load, the open circuit pump control is selected to reduce throttling loss by fully opening the control valves. When the actuator works under over-running load, the metering out control and regeneration control are selected. And when there are more than one actuators working simultaneously, the metering in control method is used to control the actuator which works under low load, and also when this actuator works under over-running load, the metering in and metering out control method is used.

EXPERIMENT AND RESULTS ANALYSIS

5.1. Experiment Rig

To investigate the effects of the proposed matching method, a test rig based on a 6-ton hydraulic excavator is built, as shown in Fig.9.

FIGURE 9. The Test Rig

In the test rig, a converter motor is used to driven a displacement variable pump, and the hydraulic control system is an independent metering in and metering out system. The working performance and energy efficiency of the single actuator such as the boom cylinder, arm cylinder and bucket cylinder are tested under the same working condition with the proposed speed and displacement coordination method and a traditional displacement variable method. The speed of the traditional displacement variable method is set as 1500 rpm.

5.2 Experiment Results

(1) Boom cylinder

Figs.10-13 present the experimental results of the speed of the motor, actual swivel of the pump, outlet pressure of the pump, the electric power input to the system and the displacement of the boom cylinder. When the boom cylinder extends out, the flow is set as the demand, and pump does not output flow at other times. When the boom cylinder retracts in, the two control valves are connected to the tank, and the boom retracts due to its gravity.

As shown in Figs.10-11, the demand flow is set as 50 L/min. At the time of 1.4 s, the operator gives the extending velocity demand signal by operating the joystick. The electric motor and pump work under the set signals. And at the time of 4.2 s, the operator releases the joystick, the electric motor works under a speed of 300 rpm, and the displacement of the pump is set as its minimum. At the time of 7.6 s, the operator gives the retraction signal, and the boom cylinder retracts under a regeneration model.

As shown in Fig.10, under the same flow rates, the speed and swivel of the pump are about 1500 rpm and 46% with the fixed speed strategy, and which are about 900 rpm and 77% with the new designed coordination method. From the pressure and displacement curves, it can be seen that the dynamic performances are approximately equal.

As shown in Fig.11, when the boom cylinder extends out, the electric power consumptions with the two methods are almost the same, which is about 14.84 kW, and the energy efficiency of the power source is about 67.3%. However, when the pump does not output flow, the power consumption is about 2.67 kW with the fixed speed strategy, and which is only 0.62 kW with the new designed method. It can be obtained that the electric power consumption during idle process can be effectively reduced.

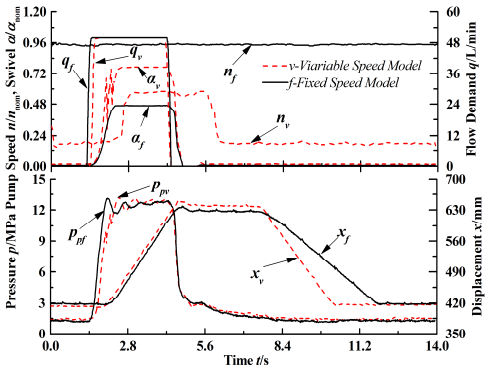

FIGURE 20. Actual speed and swivel of the pump

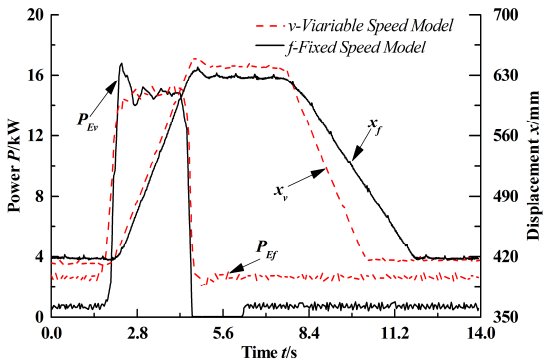

FIGURE 31. Electric power input and displacement

As shown in Figs.12-13, the demand flow is set as 30 L/min. At the time of 1.7 s, the operator gives the extending velocity demand signal by operating the joystick. The electric motor and pump work under the set signals. And at the time of 6 s, the operator releases the joystick, the electric motor works under a speed of 300 rpm, and the displacement of the pump is set as its minimum.

As shown in Fig.12, under the same flow rates, the speed and swivel of the pump are about 1500 rpm and 29% with the fixed speed strategy, and which are about 600 rpm and 71% with the new designed coordination method. From the pressure and displacement curves, it can be seen that the dynamic performances are approximately equal.

As shown in Fig.13, when the boom cylinder extends out, the electric power consumptions with the fixed speed method is 9.12 kW, which is 7.75 kW with the new coordination method, and the energy efficiencies of the power source are about 57.6% and 67.8%. It can be obtained that the electric power consumption under partial load can be effectively reduced.

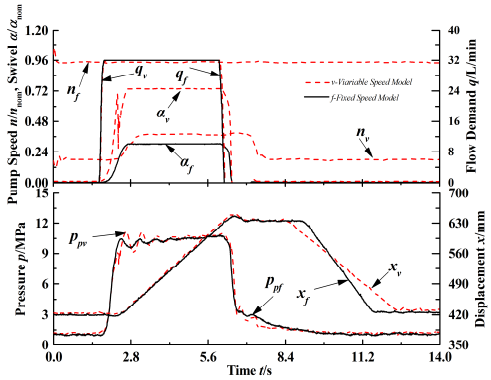

FIGURE 42. Actual speed and swivel of the pump

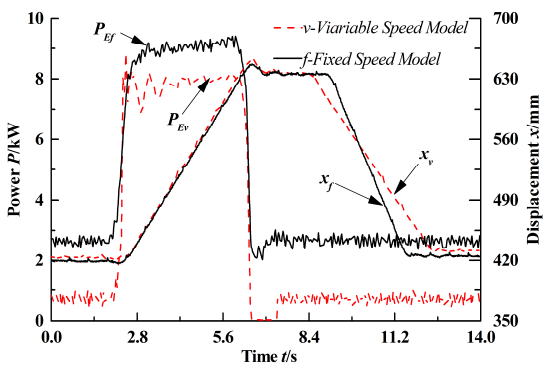

FIGURE 53. Electric power input and displacement

(2) The whole machine working

Fig.14 gives the displacements of the cylinders and electric power input to the system, when the whole machine works under non-load condition. During 2.12-4.75 s, the boom cylinder extends out with the flow rate about 50 L/min, 8.79-12.67 s, the arm cylinder extends out with the flow rate about 50 L/min, 15.05-19.61 s, the arm cylinder retracts in with the flow rate about 30 L/min, 23.45-26.99 s, the bucket cylinder extends out with the flow rate about 50 L/min, 29.51-32.85 s, the bucket cylinder retracts in with the flow rate about 30 L/min, and then 34.77-37.54 s, the boom cylinder retracts in under the regeneration model. When the boom cylinder extends out, the arm cylinder extends out and retracts in, the bucket cylinder extends out and retracts in, the energy efficiency of the power source with the fixed speed method are as follows 67.3%, 48.3%, 61.2%, 39.5% and 58.2%, and which are about 70.3%, 52.5%, 71.5%, 43.2%, 62.6% with the new coordination method.

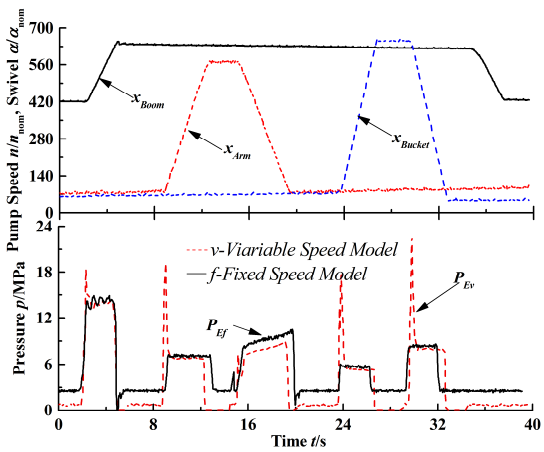

FIGURE 64. Electric power input and displacement of the cylinders

CONCLUSIONS

(1) During most working conditions, the lowest and highest energy efficiency of the power source driven by an electric motor are 43% and 71%, which is significantly higher than the power source with a fuel engine. And also, using the new coordination method, the energy efficiency can be increased about 3%-10%.

(2) During the idle period, the motor speed is set as 300 rpm and the power source output a constant pressure about 1.5 MPa, the power consumption is about 0.62 kW with the new coordination method, and which is about 2.67 kW with the fixed speed method.

(3) When the electric motor starts with full load or heavy load, the dynamic response of the power source is relatively slow. However, the dynamic response of the system can be improved to meet the needs of use with the segmented speed control and continuous displacement control and an accumulator.

ACKNOWLEDGEMENT

The author(s) disclosed receipt of the following financial support for the research, authorship, and/or publication of this article: This work was supported by the National Natural Science Foundation of China (Grant Nos. U1510206 and 51575374).

REFERENCES

1. Ochiai M, Ryu S. Hybrid in construction machinery, Proceedings of Jfps, Toyama, Japan, September 15-18, 2008, pp.41-44.
2. Johann Lodewyks, Pascal Z, Decentralized energy-saving hydraulic concepts for mobile working machines, 10th International Fluid Power Conference, Dresden, Germany, March 8–10 2016, pp.79-90.
3. Yoo B S, Cho J, Hwang C M, et al. Development of a simulation program for conceptual design of hybrid excavators, Sice Conference, Tokyo, Japan, September 13-18 2011, pp.318-322.
4. Yang Shiping, Yu Hao, Liu Jingang, Research on power matching and energy saving control of power system in hydraulic excavator, Journal of Mechanical Engineering, 50(05) (2014), pp.152-160.
5. Yang Jing, Quan Long, Yang Yang, Excavator Energy-saving Efficiency Based on Diesel Engine Cylinder Deactivation Technology, Chinese Journal of Mechanical Engineering, 25(5) (2012), pp.897-904.
6. Lajunen A, Suomela J, Evaluation of energy storage system requirements for hybrid mining loaders, IEEE Transactions on Vehicular Technology, 61(8) (2012), pp.3387-3393.
7. Shen Wei, Jiang Jihai, Su X, et al, Control Strategy Analysis of the hydraulic hybrid excavator, Journal of the Franklin Institute, 352(2) (2015), pp.541-561.
8. Kim, H., Yoo, S., Cho, S., Hybrid control algorithm for fuel consumption of a compound hybrid excavator, Automation in Construction, 68(2016), pp.1-10.
9. Casoli P, Gambarotta A, Pompini N, et al, Hybridization methodology based on DP algorithm for hydraulic mobile machinery—application to a middle size excavator, Automation in Construction, 61(2016), pp.42-57.
10. Lin, T., Huang, W., Ren, H., New compound energy regeneration system and control strategy for hybrid hydraulic excavators, Automation in Construction, 68(2016), pp.11-20.
11. Hu Q., Zhang H., Tian S. and Qin X., Performances analysis of a novel load-sensing hydraulic system with overriding differential pressure control, Proceedings of the Institution of Mechanical Engineers Part C Journal of Mechanical Engineering Science, (2016), pp.1–13.
12. Jaehong Cho, Jimin Lee, Jaeseok Lee and Panyoung Kim, Simulation-aided testing of electro-hydraulic pump for excavator, Proceedings of the ASME/BATH 2015 Symposium on Fluid Power and Motion Control, Chicago, USA, October 12-14 2015, pp.1-8.
13. Cho Y L, Jang D S, Kim K Y, Development of the energy efficient electro-hydraulic system for excavator, 7th International Fluid Power Conference, Aachen, Germany, March 22-24 2010, pp.1-12.
14. Wang T., Wang Q., Lin T., Improvement of boom control performance for hybrid hydraulic excavator with potential energy recovery, Automation in Construction, 30(2013), pp.161-169.
15. Lu L., Yao B., Energy-saving adaptive robust control of a hydraulic manipulator using five cartridge valves with an accumulator, IEEE Transactions on Industrial Electronics, 61(12) (2014), pp.7046-7054.
16. HELDUSER S., Electric-hydrostatic drive－ an innovative energy-saving power and motion control system, Proceedings of the Institution of Mechanical Engineers, Part I：Journal of Systems and Control Engineering, 213(5) (1999), pp.427-437.
17. Quan Long, Helduser S, Energy saving and high dynamic hydraulic power unit based on speed variable motor and constant hydraulic pump, China Mechanical Engineering, 14(7) (2003), pp.606-609.
18. Minav T A, Pyrhonen J J, Laurila L I E, Permanent magnet synchronous machine sizing: effect on the energy efficiency of an electro-hydraulic forklift, IEEE Transactions on Industrial Electronics, 59(6) (2012), pp.2466-2474.
19. Liu B, Quan L, Ge L., Research on the performance of hydraulic excavator boom based pressure and flow accordance control with independent metering circuit, Proceedings of the Institution of Mechanical Engineers Part E Journal of Process Mechanical Engineering, 2016.
20. Yang X J, Zhang X J, Gong Y M, Starting characteristics of motor in inverter-motor drive system, Journal of Shanghai University, 4(2) (2000), pp.140-144.

