The 10th JFPS International Symposium on Fluid Power FUKUOKA 2017 Oct. 24-27, 2017 The Japan Fluid Power System Society

JOINTED AND TELESCOPIC RIGID TUBULAR MEMBERS AS A FLUID CONVEYANCE DEVICE

Cheyne SOUTHWELL*, Philip McCLUSKEY**, Norman MATHERS***

* PO Box 74, Banyo Queensland 4104 Australia
** Quadratech Consulting Inc.
11653 Millennium Parkway
Plainfield, IL 60585 USA
(Email: mccluskeyph@quadratechconsulting.com)
*** Steel Safe Fluid Power
PO Box 74, Banyo
Queensland 4104 Australia
(E-mail: norm@mathershydraulics.com.au)

Abstract. Conveyance of fluid and hydraulic power via steel tubes and rubber/synthetic hoses are well known and widely used. Tubing meets the needs for rigid conveyance (i.e. along an excavator boom), and hoses meet the need for flexible conveyance (i.e. at the boom:upper car-body and in engine bays). Hose failure mechanisms are well known, and include cuts, abrasion, rubbing, and degradation due to heat and ultraviolet (UV) light. To minimize failures, which can lead to fires, down time and oil spills, most OEMs recommend daily visual inspection of hoses. Some government regulations *require* hose changes on specific intervals (i.e. 12 months). A jointed and telescopic rigid tubular steel fluid conveyance article has been developed which provides the needed freedom of movement of a hose, without the concerns of failure from cuts or abrasion, and will not degrade due to heat or exposure to UV light.

Keywords: Safety, Regulatory Compliance, Cost Reduction

BACKGROUND

Despite advances in hose design, durability and performance, hose failure is something that every machine owner experiences at one time or another. In every case, failure results in un-planned downtime and loss of revenue. Typically there is an environmental event as well, as spilled oil needs to be cleaned from the machine and the surrounding area. In the absolute worsts cases, bodily injury can occur to people in the area, or, in the event of hose failures in and around engine bays, machines can be destroyed by fire. As emissions for vehicles have become more stringent, engine bay temperatures have risen. Along with this, the number of engine fires, especially in motor coaches, has increased. The city of Sydney has seen a 43% increase in bus engine fires from 2013 to 2015, while the state of New South Wales has seen an increase of 50% over the same period [1].

FIGURE 1. Hose failures in engine bays are often the case of catastrophic fires resulting in total loss of the equipment and damage to road surfaces. [2,3]

The issue arises from the fact that petroleum based fluids (hydraulic brake, and fuel) used in these machines have a flash point near 200C, and self ignite near 350C [2]. While some investigators are pursuing systems that use non-flammable hydraulic fluids for heavy equipment, such as water/glycol mixtures, broad application of

this is still years away due to other issues in the balance of the hydraulic system. And, even a water/glycol solution would not eliminate UV degradation of hoses. UV-based degradation in hoses is well known, as the UV light causes polymer cross-linking and subsequent decreases in elastic properties and physical cracking.

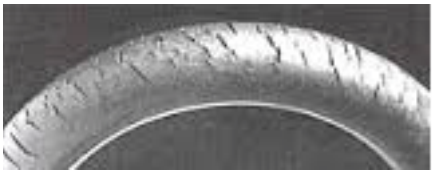

FIGURE 2. Hose failure can arise from dryness and cracking of the rubber compound, especially in applications subject to high heat and high UV radiation exposure.

Coatings and wraps have been designed to minimize the impact of UV on hoses [4], but in harsh mining and construction applications the coatings can become damaged. Currently available flexible steel hoses are limited to pressures less than many machines need at the flow volumes needed. Thus, a jointed and telescopic assembly of rigid tubular members has been devised.

ANALYSIS

Machine manufacturers have become careful where hoses are routed, as well as installed hose guards to minimize the opportunity for rubbing damage, or bodily injury in the event of a high pressure failure. However not all areas of concern can be addressed with these techniques in a cost-effective manner. Especially when hoses need to be routed in or near engine bays the concerns of hose failure are quite significant, as any failure would add a combustible fluid to a hot area, with the consequence of a fire almost certain.

Routing and guarding do nothing to address degradation in hoses by pressure spikes, pulsing, temperature spikes, and UV light exposure. All are known to degrade hoses, but it is difficult to quantify the damage. This leads to replacement being controlled by a time interval based on historical Weibull statistics, not a damage limit, which incurs unnecessary downtime and cost for the machine owner. Additionally, there are consequences and costs related to the proper disposal of used hoses.

RESEARCH

Understanding the limits of the current hoses and hydraulic systems, the project was undertaken to address the shortcomings in flexible hose, while maintaining the benefits of steel tubing. The result, a novel process of joining rigid tubular pieces allowing for pressure variation, flow variation and articulation has been devised.

The challenges faced included a joint with the ability to rotate, provide high pressure sealing, meet wear requirements, allow for vibration and pressure variation, and ensure seal life during extreme temperature events (i.e. fires). To overcome these challenges and more, a flexing joint comprising both inner and outer ball joints as shown in Figure 3 has been developed.

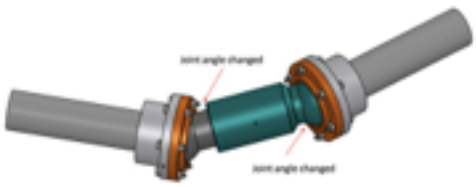

FIGURE 3. A rigid tubular fluid conveyance design which allows for articulation.

Pressure is controlled via a proprietary channel design interior to the joint provides for relief of over pressure events as well as preventing cavitation in under pressure events. Advanced materials and coatings are used to provide fretting resistance. Seals are designed for easy maintenance on a scheduled basis, and are such that in the event of a high temperature excursion will not leak.

The design is such that the primary seal in the articulating section is balanced with the diameter of the barrel of the single acting cylinder. Any pulsation in the system will therefore not result in shifting of the seal or seal degradation.

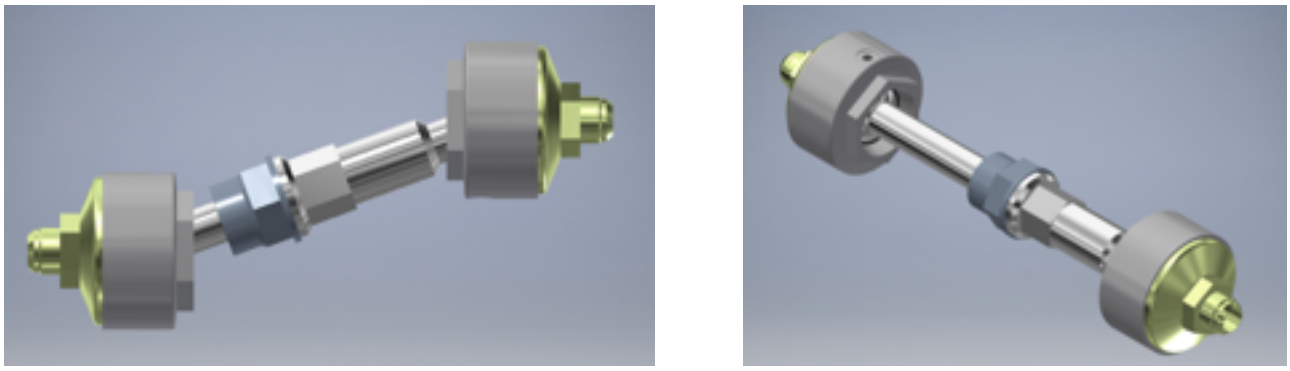

FIGURE 4. A rigid tubular fluid conveyance design as articulated (left image) and extended (right image).

The design, shown in Figure 4, depicts two ball-type joints at the coupling ends, with an telescopic main body. This design allows for axial and rotary freedom of movement over 60 degrees, while the telescopic section can be designed for nearly any need.

The detailed design, shown in Figure 5, depicts the significant workings that allow for articulation of the ball joint and extension of the tube. These two features enable the joint to mimic the flexibility of a hose while providing the benefits of a solid fluid conveyance. For example, in a joint between a car-body and boom on an excavator, the joint will need to both articulate and extend as the boom is raised or lowered. The design allows for the axial and rotary freedom of movement, much like a hose would do. Using seals similar to traditional hydraulic cylinder seals (primary, backup, wiper) would prevent oil leakage to the environment. An additional safety feature of the device would include a thermal locking seal, which would serve to provide sealing in an over-temperature (fire) event. This thermal expansion seal would provide for complete isolation of the fluid and be completely independent of the operational seals.

Pressure sensors mounted in the end caps provide for electronic monitoring of the systems and can alert the operator to any drop in pressure. The electronic monitoring could easily provide alert notifications both on-board and remotely.

Finally, use of a steel fluid conveyance would provide for positive environmental impacts through the ease of recycling. Current rubber hoses have not been able to be recycled or re-purposed. Frequent changes to hoses produces a waste product that has to be land-filled. In the current device, re-build would be possible through seal changes. At the end of life, the metallic components could easily be recycled.

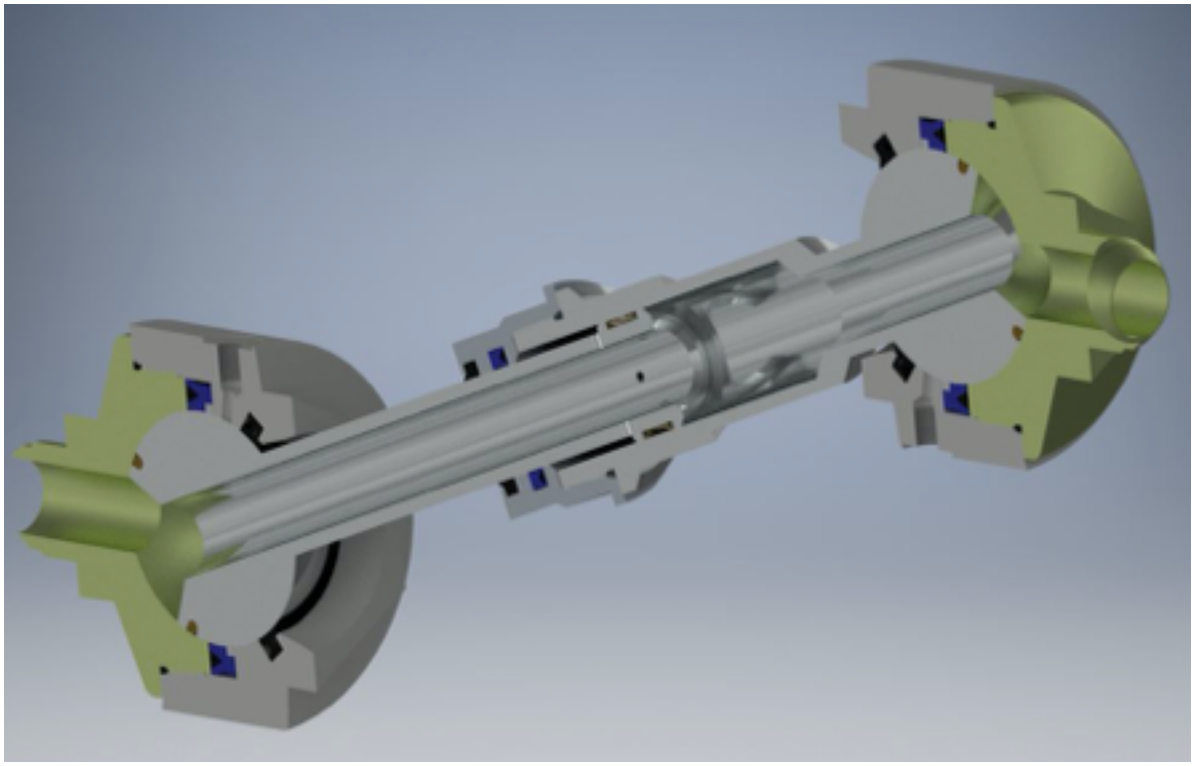

FIGURE 5. The internal workings depicting seals and pressure sensor ports.

REFERENCES

1. Office of Transport Safety Investigations, Bus Safety Report, File reference 04594(3), 2016. www.otsi.nsw.gov.au
2. JACKSON, T, How to Make Sure Your Heavy Equipment Doesn't Burst Into Flames, Equipment World, 11MARCH2015.
3. Tribune India, May 14, 2017.
4. Belzona, *Know-How in Action*, Volume XX, No. 25, 201

ACKNOWLEDGMENTS

The authors would like to thank Mr. Keith Larsen for his consultation and thoughtful critique of the proposed conveyance device.

