PERFORMANCE OF SPEED VARIABLE ASYMMETRIC PUMP CONTROLLED ASYMMETRIC HYDRAULIC CYLINDER

Long Quan, Lei Ge, Chengbin Wang, Bin Li, Bin Zhao, Zhen Lu

*Key Lab of Advanced Transducers and Intelligent Control System of Ministry of Education, Taiyuan University of Technology,
Taiyuan, P.R.China
(E-mail: quanlong@tyut.edu.cn)

Abstract. Valves controlled cylinder are applied in many industry and mobile equipments due to its compact structure, high dynamic performance and easily to drive more than one actuators by a single pump. However, the energy efficient is low, which caused by the large throttling loss and the simultaneous actuation of the valves meter-in and meter-out control edges. These losses can be avoided by replacing the valve controlled system by a pump controlled system. To a typical pump controlled asymmetric cylinder system, a complex and big flow circuit is necessary to compensate the flow difference between the working ports of the cylinder. And also, the operation stability of the system will become worse when the load force direction changed frequently and the control chamber changing alternatively. This paper addresses the stability problem of pump controlled asymmetric hydraulic cylinder especially which works under four quadrants, and proposes a novel solution for it. The system under consideration utilizes a new designed asymmetric pump which can match the differential area of an asymmetric cylinder basically and was used to control the arm cylinder of excavator. To verify the feasibility of the new circuit, a multi-body dynamic model of the excavator with symmetric and asymmetric pump is constructed. Furthermore, the operating characteristics and energy efficiency characteristics of the arm with the new scheme based on the designed open-loop and closed-loop strategies are studied on a real excavator. The results show that there is no obviously velocity fluctuation with the asymmetric pump and the position controlled precision is satisfied. Compared with the independent metering circuit with pump and valve accordance control, the energy-saving ratio reaches to 75.3% during a working cycle.

Keywords: Asymmetric pump, Four-quadrant operating, Pump-controlled cylinder, Energy efficiency

INTRODUCTION

Hydraulic systems have been widely used in industry and mobile machines by virtue of high-power density and high speed of response with fast start, stop and speed reversal possible. It can be classified as the circuit type into valve controlled system and pump controlled system. Valve controlled system are applied in many machines due to its compact structure, high dynamic performance and easily to drive more than one actuators by a single pump. However, the advantage of such a simple hydraulic drive structure is always connected to its disadvantage of large energy losses, such as throttling loss. It is reported that only 35% of the pump output power was transferred to the actuators [1]. There are therefore many years' efforts to develop hydraulic systems without throttle losses. Pump controlled systems also called displacement controlled system, can eliminate throttling loss completely and have proven themselves in practice for a long time [2-3].

The pump controlled system consists of pump controlled double rods hydraulic cylinder (motor) and pump controlled single rod hydraulic cylinder, Zhongyi Q. has given a review of the latest development of these circuit and control technologies [4]. It can be seen that pump controlled double rods hydraulic cylinder has been well-developed and has been an inherent part in industrial applications, for example in Airbus A380 [5-6]. Due to the small installation space requirements and big output force, at least 80% of the electro-hydraulic control system adopts the single rod cylinder as actuator. Additional challenge for pump controlled system is to compensate the unbalanced flow rates due to the asymmetry in the single rod cylinder.

There are several solutions for the unbalanced flow rates compensation problem: use of hydraulic transformer[7], use of secondary pump[8], and use of a single pump combined with pilot operated check valves, shuttle valves or solenoid valves. These systems are reported that the energy efficiency can be significant improved [9-10]. Long Q. put forward a circuit in which the cylinder was controlled by two variable speed pumps, and sum pressures control strategy was put forward to pressurize the cylinder chambers to improve the dynamic performance [11-12].

The circuit with a single pump combined with compensation system is a relatively simple solution to compensate for unbalanced flow rates compared with the two pumps scheme[13-15]. In recent years, professor Monika Ivantysynova and her team, studied the static and dynamic behavior, and control strategy of the pump

controlled single rod cylinder circuit [16-21]. It could be shown that the circuit solutions utilizing a single pump combined with pilot operated check valves, shuttle valves or solenoid valves are able to achieve a good energy efficiency. However, these systems suffer from undesired and uncontrolled pressure and velocity oscillations, when the load is light or the load force direction changed frequently. To overcome this backward, some solutions are proposed, such as a predictive observer to provide sufficient lead time for feedforward control of actuator pressure [22], adopting two solenoid directional valves controlled with singular point perturbation theory[23], and adopting a pair of check valves and an On/Off valve to compensate the flow difference, a counterbalance valve to control the chamber pressure of cylinder [26].

In summary, the two pumps scheme can compensate the unbalanced flow basically, unfortunately the auxiliary components will increase the cost and complexity of the overall system. And the asymmetrical volume flow cannot be easily compensated by a single pump and the asymmetrical flow will increase energy exchange in the check valve. Also, it suffers from undesired and uncontrolled pressure and velocity oscillations, when the load is light or the load force direction changed frequently. In order to eliminate these disadvantages, an innovative pump controlled architecture with a new designed asymmetric pump which can match the unbalanced flow of the cylinder is put forward. The new system is used to control the excavator arm cylinder which works under four quadrants. Innovative research and major contributions of this articles is that the smooth control of hydraulic cylinder position and velocity can be achieved by only a new designed asymmetric pump without complex compensation circuit and control strategies.

This paper is structured as follows. Firstly, the circuits principle of the single rod cylinder controlled by symmetric pump and asymmetric pump are given in Section II. In Section III, the multi-body simulation model is constructed and the dynamic working performance of symmetric and asymmetric pump controlled arm cylinder is analyzed based on the model. In Section IV, the strategy of position closed loop combined with velocity feed forward control is designed with only displacement feedback. Experiments are conducted to prove the performance of the whole system and the energy efficiency of the new system is compared with a separate metering in and separate metering out system. Conclusion is made in Section V.

WORKING PRINCIPLE OF PUMP CONTROLLED SINGLE ROD CYLINDER

Recently, a single pump controlled single rod cylinder in the study region is one of the hot topic in pump controlled systems due to its simple structure, low costs and big output force. In case of these systems, there exist unequal flow rates at two ports of the cylinder due to its asymmetric structure. And when a conventional pump is used to control this type cylinder, either a deficient or excess flow rate is always formed in the closed circuit. Hence researches have been focused on the compensation method of the unequal flow rates and on improving the stability of the system. There are several solutions for the differential flow compensation problem: use of secondary pump combined with accumulator and valves, use of hydraulic transformer. Both these concepts and structures have the drawbacks of high investment costs, increased number of control element, and required complex control effort. This paper proposes a novel compensation solution based on a new designed asymmetric pump and the system stability can be improved without much control efforts and additional element.

2.1 Conventional Pump Controlled Single Rod Cylinder System

The circuit of the symmetric pump controlled single rod cylinder is shown in Fig.1. A servo motor is used to regulate the drive speed of a constant pump. The two ports of the pump are directly connected to the single rod cylinder, the cylinder velocity can be regulated by changing the speed of the motor. An essential part of this circuit is the low pressure compensation system, which consists of a small pump and an accumulator. Its functions include compensating for the cylinder unbalanced flow, compensating for the volumetric losses in the closed circuit and cooling of the hydraulic fluid, over two back to back connected hydraulic controlled check valves. And pressure relief valves are utilized to limit operating pressure.

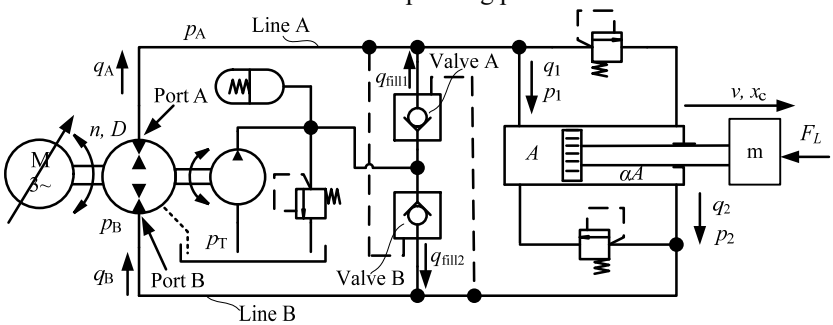

FIGURE 1. Pump controlled single rod cylinder with check valve balancing the flow

According to the working condition and job demands, many hydraulic systems are required to operate in 4-quadrants. That means that the cylinder and pump can both work as a hydraulic pump or motor. Hence the working process of the pump controlled single rod cylinder system under 4 quadrants is described as follows.
Consider extending the cylinder under resistance load, the pressure in the cylinder rodless chamber is high than it in the rod chamber. So, the rodless chamber is named as control cavity. The pump sucks oil from cylinder rod chamber though port B, and then the pump discharge oil to cylinder rodless chamber though port A. The pilot operated check valve B will be open by the pressure in the rodless chamber. The compensation system supplies low pressure oil to cylinder rod chamber. D and n are the displacement and rationing speed of the pump, v is the velocity of the cylinder, A and αA represent the area of the rodless and rod chamber of cylinder. Without considering the system leakage, the flow rate output the pump, q_A and the flow rate into the pump, q_B, can be written as $D\ n$. The flow rate input the cylinder rodless chamber, q_A, is about $A\cdot v$, and it is equal to the flow rate of the pump port A, and so the velocity of the cylinder can be written as $v=D\ n/A$. The flow rate output the cylinder rod chamber, q_B, is about $\alpha\ A\ v$. The compensation system should deliver a flow rate, q_{fill2} of $(1-\alpha)\cdot A\cdot v$ to the main line F. Consider retracting the cylinder under resistance load, the control cavity is the cylinder rodless chamber, the flow rate input the cylinder rod chamber is equal to the flow rate of the pump port B, and the velocity can be written as $v=D\ n/(\alpha\cdot A)$. The compensation system should store a flow rate, q_{fill1} of $(1-\alpha)\cdot A\cdot v$ to the main line E. And also, consider extending the cylinder under overrunning load, the control cavity is the cylinder rod chamber, $v=D\ n/(\alpha\cdot A)$, $q_{fill1}=(1-\alpha)\cdot A\cdot v$. Consider retracting the cylinder under overrunning load, the control cavity is the cylinder rodless chamber, $v=D\ n/A$, $q_{fill2}=(1-\alpha)\cdot A\cdot v$.
It can be concluded that when the displacement and rotating speed of the pump is a constant valve, the compensation system should deliver a flow rate of $(1-\alpha)\cdot A\cdot v$ during extending process and store the same flow rate during the retraction process. And also, the cylinder velocity will change if the load condition changes.

2.2 Asymmetric Pump Controlled Single Rod Cylinder System

As mentioned above, for the conventional pump controlled single rod cylinder, due to the asymmetry structure of the system, the relationship between the cylinder velocity and pump rotating speed depends on the load conditions, so the cylinder velocity stability is worse when the load changes frequency. In order to solve this problem, we have introduced the principle of asymmetric valve controlled asymmetric cylinder system to the pump controlled single rod cylinder system based on a new designed asymmetric pump. Benefiting from the asymmetric structure of the pump, the flow rates of the cylinder and pump can be balanced basically. Fig.2 gives the working principle and photograph of valve plate and cylinder block of the new designed asymmetric pump.

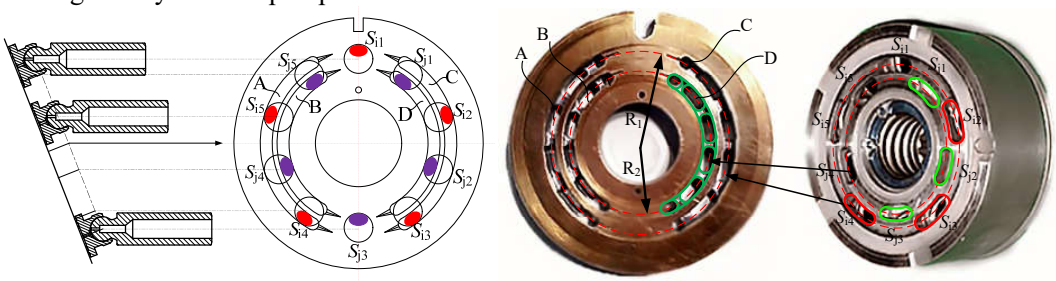

(a) Working principle of the pump (b)Photograph of the Valve Plate and Cylinder Block

FIGURE 2. Working principle of the Asymmetric Pump and Photograph of the Valve Plate and Cylinder Block

It can be seen that there are four assignment windows on the valve plate, named A, B, C and D. A and C are on a circle with a radius of R_1. B and D are on a circle with a radius of R_2. Windows A and B are connected to each other by the port A_1 on the pump end shell cover. Windows C and D are one-to-one correspondence with pump ports B_1 and C_1. There are 10 plunger chambers and they are divided into two groups averagely. At the bottom of the cylinder block, there are an inner annular array and an outer annular array. The pitch radiuses of these two annular arrays match with the slots A, B, C and D on the valve plate. As shown in Fig.2(b), the plunger chambers identified as S_i, correspond to the outer annular array, and these five pistons suck and discharge oil from the outer annular array only. The plunger chambers identified as S_j, correspond to the inner annular array, and these five pistons suck and discharge oil from the inner annular array only. So benefiting from the asymmetric structure of the flow distribution, the flow rates ratio of the three ports of the pump is about 1: 0.5 : 0.5. And we can match the area ratio of single rod cylinder by changing the piston diameter or R_1 and R_2 to change the flow rate ratio.
The principle of asymmetric pump controlled single rod cylinder is given in Fig.3. A servo motor regulates the drive speed of the new designed asymmetric fixed displacement pump. The ports A and B of the pump

are directly connected to the single rod cylinder, and port C_1 is connected to an accumulator directly and tank though a check valve. And also, the accumulator is used to compensate the differential flow rate caused by leakage and to pressurize the low pressure chamber over the hydraulic controlled check valves. And pressure relief valves are utilized to limit operating pressure, respectively.

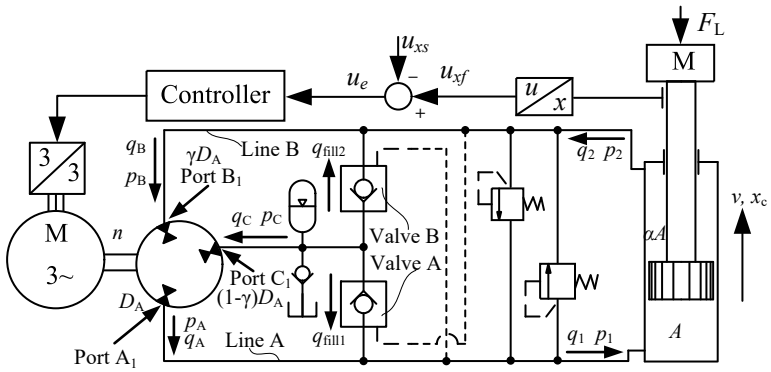

FIGURE 3. Principle of Asymmetric Pump Controlled Single rod cylinder

During the extending process, the pump sucks oil from cylinder rod chamber though port B_1, and from tank or accumulator though port C_1. Then the pump discharge oil to cylinder rodless chamber. During the retraction process, the pump sucks oil from cylinder rodless chamber though port A_1. Then the pump discharge oil to cylinder rod chamber and to accumulator though port B_1 and C_1. n is the rationing speed of the pump, v is the velocity of the cylinder, A and αA represent the area of the rodless and rod chamber of cylinder. D_A, γD_A and $(1-\gamma) D_A$ are the displacements of the pump ports A_1, B_1 and C_1, and γ is the displacements ratio between the port B_1 and A_1. Consider extending the cylinder under resistance load and retracting the cylinder under overrunning load, the control cavity is the rodless chamber, and the rod chamber is pressurized by the accumulator though port C_1. Under these conditions, the cylinder velocity can be written as $v=D_A\, n/A$. Consider extending the cylinder under overrunning load and retracting the cylinder under resistance load, the control cavity is the rod chamber, and the rodless chamber is pressurized by the accumulator though port C_1, the cylinder velocity can be written as $v=\gamma\, D_A\, n/(\alpha A)$. As the displacement ratio γ is designed to equal to the area ratio of the rodless and rod chamber of cylinder α, the flow rates in and out of the pump and cylinder match to each other basically.

MULTI-BODY DYNAMICS SIMULATION

Because of the requirements on the installation space and output force, at least 80% of the electro-hydraulic control system adopts the differential cylinder as actuator, such as excavator and press machine. In many applications and working conditions, both the value and the direction of load tend to change during working process, such as excavator arm cylinder. For the four quadrants working cylinder, in the valve controlled system, the method to improve the control performance, is increasing the pressure of return oil which will cause a large energy loss. So the new asymmetric pump is applied to control the excavator arm cylinder which is a typical four quadrants operating actuator. The control performance and energy efficiency are studied in this paper.

3.1 Pump Controlled Arm Cylinder Model

Unlike the working condition of the conventional hydraulic cylinder, the load exerted on the cylinder used in the mobile machine varies in large range and is unpredictable. It is difficult to establish the dynamic mathematical model of such system. In order to have a good knowledge about the working performance of the new designed system and the actuator, benefiting from the computer simulation technique, a multidisciplinary and multi-body dynamics model of the machine is constructed. And also, the performance of symmetric pump controlled system is studied for comparing.

A simulation model is created in order to analyze the symmetric pump controlled system and to implement new concepts into the existing machine on a virtual level. A multi-body model coupled with the hydraulic model determines the forces that act on the actuators. The moment of inertia and mass of the mechanical are taken into account and also the force acting on the bucket can be transmitted to other actuators in real time. The simulation model is based on SimulationX, which is based on the open source language Modelica. The model can be seen in Fig.4 below.

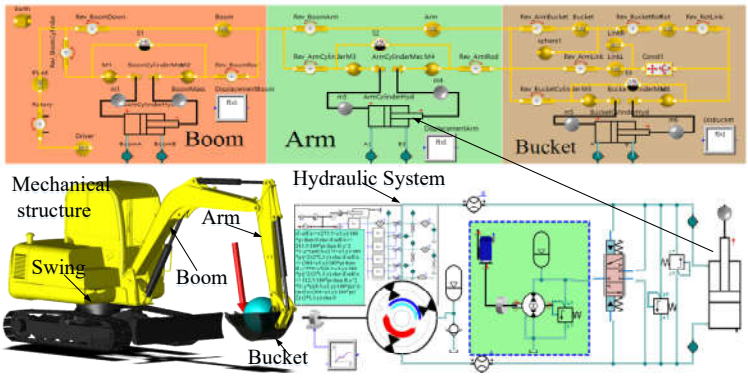

FIGURE 4. Simulation Model of the Asymmetrical Pump Controlled Excavator Arm Cylinder

As shown in Fig.4, the prototype consists of the hydraulic excavator mechanical structure such as boom, arm bucket and swing and so on, and electro-hydraulic system is constructed based on the circuit shown in Fig.3. For a real variable speed pump controlled system, the response of the servo motor is enough and it can be simplified to a simpler model to reduce the simulation time without much compact on the performance. The new designed asymmetric pump is a detail model based on detailed geometry model using single piston structure. And a small fixed gear pump combined with accumulator is used to balance the unbalanced flow rates caused by the leakage and volume loss. Parameters of the shuttle valve are included based on the real structure in the system model, rather than treating it as an ideal switching element as handled in literature. The model can be modified to a symmetric pump controlled system by replacing the asymmetric pump and increasing the displacement of the gear pump. The mechanical structure and asymmetric model has been verified in the team's previous research work [25-26].

In the model, the arm cylinder stroke is about 720 mm, and the diameters of the piston and piston pole are 85 mm and 55 mm. The displacements of the asymmetric pump are 40 mL/r、20 mL/r、20 mL/r. The flow rate of the compensation system is about 5 L/min.

3.2 Simulation Results

Fig.5 gives displacements, velocities, pressures of the arm cylinder controlled by symmetric pump and asymmetric pump. As shown in Fig.5 (a), during 0~1 s、6.5~8 s and 13.5~15 s, there is control signal and the cylinder does not work. At the time 1 s, the motor speed is set as 700 r/min. During 1~3.6 s, the arm cylinder extends under overrunning load, and the control chamber is the rod chamber, the velocity is about 154 mm/s. Along with extending, the load decreases, and at the time 3.6 s, load goes to 0 kN, and the pressures in the cylinder two chambers are equal which can not open the shuttle valve. Then the velocity slows down to about 76.5 mm/s. And then the cylinder works under resistance model. At the time 8.0 s, the motor speed is set as -700 r/min. During 8.0~9.2 s, the arm cylinder retracts under overrunning load, and the control chamber is the rodless chamber, the velocity is about 77.5 mm/s. Along with retraction, the load decreases, and at the time 9.2 s, load goes to 0 kN, and the pressures in the cylinder two chambers equal compensation pressure. Then the velocity goes up to about 76.5 mm/s. And then the cylinder works under resistance model.

Fig.5(b) gives displacement, velocity, pressures of the arm cylinder controlled by asymmetric pump. It can be seen that the cylinder velocity is comparatively steady during extending and retracting. And also, hydraulic cylinders are still running at the same velocity even the control chamber changes.

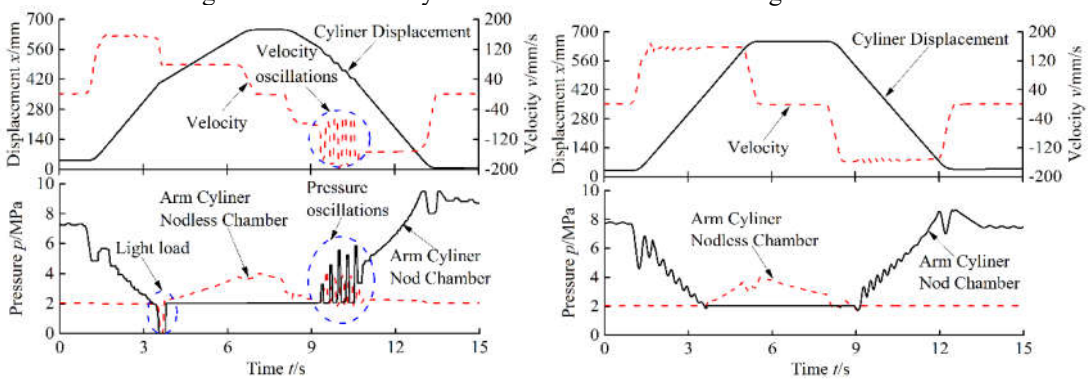

(a) Symmetric Pump Controlled Arm Cylinder (b) Asymmetric Pump Controlled Arm Cylinder

FIGURE 5. Working Performance Compared with Symmetric Pump Controlled and Asymmetric Pump Controlled

Mention above, the asymmetric pump can balance the unbalanced flow rate of the asymmetric pump, and also the velocity and pressure oscillations caused by the changing of the control chamber can be avoid. However, it is difficulty to match dynamic flow of the pump and cylinder due to the leakages. So the matching characteristics between the pump and the cylinder is studied based on the model by changing the displacement of the port B. Fig.6 gives the working performance of the system when γ_1=95%γ_2 and γ_1=105%γ_2. According to the curves in Fig.6, when $\gamma_1<\gamma_2$, the pressures and velocity are comparatively steady, and when $\gamma_1>\gamma_2$, the pressures is similar to the pressures of symmetric pump controlled system.

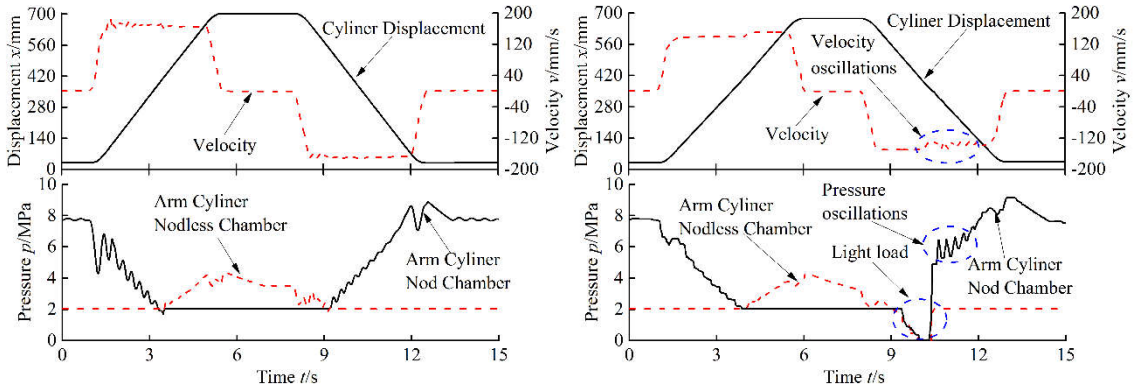

(a) γ_1=95%γ_2 (b) γ_1=95%γ_2

FIGURE 6. Working Performance of Asymmetric Pump Controlled System Changed Matching Ratio

CONTROL STRATEGY AND EXPERIMENTS

4.1 Control Strategy

Velocity control is widely used in hydraulic excavator. The operator gives the velocity command by operating the joystick. And then the displacement or rotational speed of the pump changes. The actuator works at the demand velocity. When the cylinder approaches the demand location, the operator relieves the joystick. The actuator stops.

But only adopting an open loop to control arm velocity may result in no position accuracy and poor anti-interference ability, the working performance relies on the operator. And it is difficult to realize automatic excavation. For these problems, a strategy of displacement closed loop control is designed to realizes accuracy control of the cylinder, as shown in Fig.7. However, the velocity can not be controlled using only displacement closed loop control. So the displacement closed loop control combined with velocity feedforward is put forward. On the base of position control system, the velocity feedforward is introduced to control the velocity. When the difference between the desired position and the real position is large, the velocity feedforward control plays an important role. And position feedback plays an import role when the difference is small.

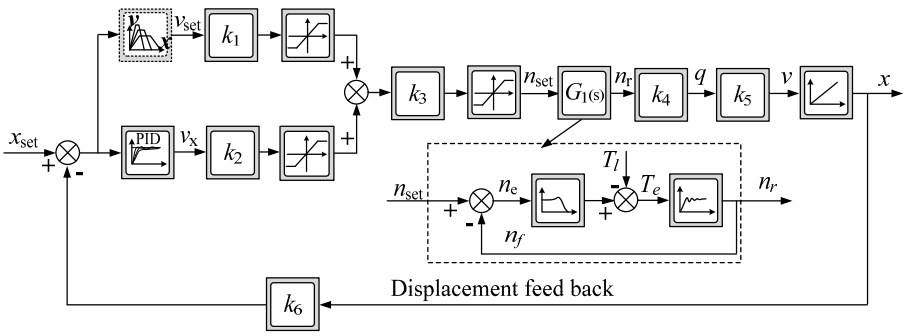

FIGURE.7 Position Closed Loop Control Combined with Velocity Feedforward

If the excavator is in artificial operation condition, it can get rid of the position closed loop and just use velocity feedforward to realize velocity control. In this way, the operator gives sets the velocity demand by operating the joystick, the signal is calculated and gives to the motor driver to control the rotational speed of the electric motor and so the pump output the demand flow. If the excavator works under automatic operation condition, when the target position is given, the target velocity signal will be formed by velocity regulator in position closed loop according to the position difference between the target and actual position

As shown in Fig.7, the operator gives the desired position signal x_{set}, then the controller calculates the desired velocity signal v_{set} and v_x to control the speed of the servo motor. And then the velocity and position of the cylinder can be realized. If the velocity feedforward is cut off, then the system work as position control. And also, the controller can be modified to velocity open-loop control if the displacement feedback is cut off.

4.2 Experimental System

In order to provide compared data about working performance and energy efficiency, the test of arm cylinder with separate metering in and separate metering out system driven by an inverter motor is implemented first[27-28]. After the test of the arm cylinder controlled by separate metering system, the asymmetric pump controlled arm cylinder test rig is constructed, as shown in Fig.8.

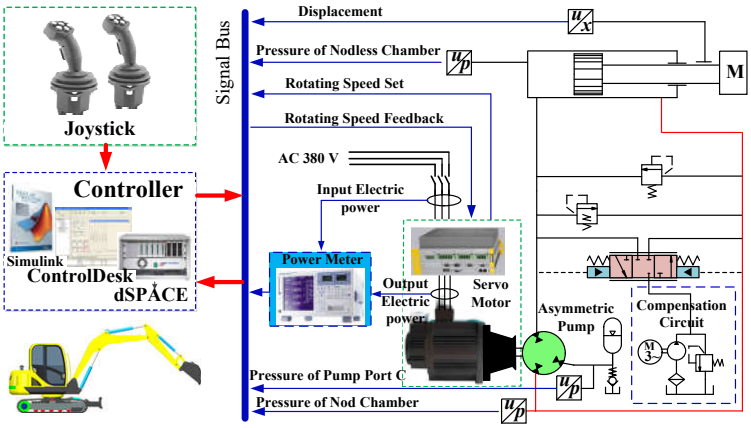

FIGURE.8 Experiment Platform

As shown in Fig.8, the arm cylinder is controlled by an asymmetric pump driven by a servo motor. A small gear pump is introduced to compensate the unbalanced flow caused by leakage. And also, there are additional instruments such as displacement sensor in the actuator, pressure sensors on the pump and cylinder, power sensor and rotational speed sensor on the motor which are employed to detect the corresponding variables. The circuit control concepts of the position closed-loop combined with velocity feedforward are being realized by the hardware in the loop computer control system ds1103. The test rig and instruments are shown in Fig.9.

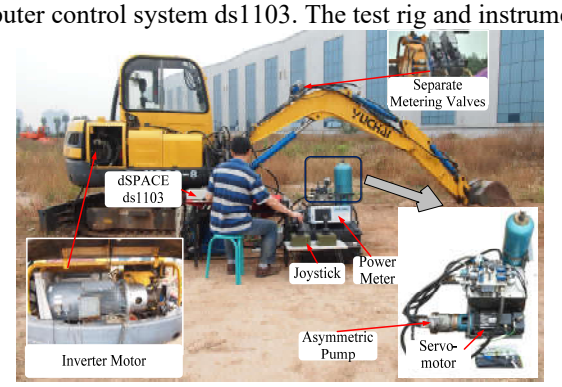

FIGURE.9 Photograph of Mini-excavator with the Proposed System

4.3 Experimental Results

(1) Velocity open-loop control

Fig.10 presents the experimental results of the outlet pressure curve of the pump, the pressure curves of the arm cylinder chambers, the velocity curve and displacement curve of the arm cylinder.

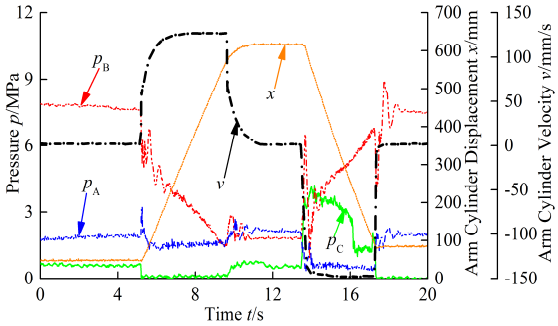

Figure.10 Velocity open-loop control

During 0-5.16 s, 9.59-13.44 s, 17.33-20.00 s, the operator does not operate the joystick and the motor does not work. During 5.16-9.59 s, the joystick output a positive control command, the hydraulic cylinder extends out. In this process, the pressure of the rod chamber reduces gradually. When the direction of the load force is changing, the pressure of the rodless cavity increases. During 13.44-17.33 s, the joystick output a negative control command, the hydraulic cylinder retracts. In the retracting process, the pressure of the rodless increases gradually. During the whole work time, there velocity and pressure have no significant fluctuations.

(2) Position closed-loop combined with velocity feedforward

Fig. 11 and Fig. 12 show the dynamic response with the closed-loop position control strategy combined with velocity feedforward. At the time of 2.41 s, the demand position is set to as 600 mm with the keyboard. The servo motor accelerates from zero to the saturation value and the arm cylinder extends out. The motor speed set point is determined by the velocity and position closed loop. During the extending process, the hydraulic cylinder moved moves from 50 mm to 599.68 mm for 5.84 s with at an average speed of 94 mm/s. At 18.23 s, the given position is set to as 100 mm via the keyboard, the motor accelerates reversely, and the cylinder retracts and the cylinder moves from 599.85 mm to 100 mm for 4.69 s with at an average speed of approximately 106.60 mm/s. The control error of the strategy is small, only about 0.10 mm, which can satisfy the requirements.

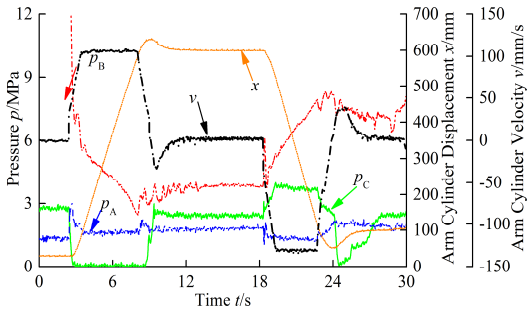

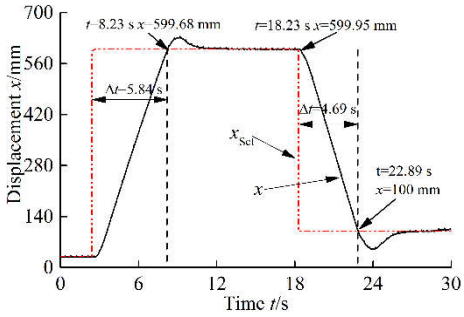

Figure.11 Working performance with position closed-loop **Figure.12** Position response

(3) Energy consumption characteristics

Fig.13 shows the electrical power input and consumption of electric energy curves comparison between the separate metering in and metering out system and the new designed circuit at an average run speed of 100 mm/s. As shown in the Fig.13, during 2.41 s-6.98 s, the cylinder extends, the average electric input power of the independent control system is about 2.83 kW, and which is about 0.74 kW of the asymmetrical pump system. The energy saving ratio reaches up to 87.0%. During 19.02 s-22.81 s, the cylinder retracts, the average electric input power of the separate metering in and metering out system is about 11.7 kW, and which is about 5.8 kW of the asymmetrical pump system. The energy saving ratio reaches up to 50.4%. In the whole course of the work, the arm displacement from 50 to 600 mm, the separate metering in and metering out system consumes electricity about 127.1 kJ. And asymmetric pump control system consumes only 30.95 kJ. The energy saving ratio can reach up to 75.3%. The whole machine is more efficient with the design of the asymmetric pump control system.

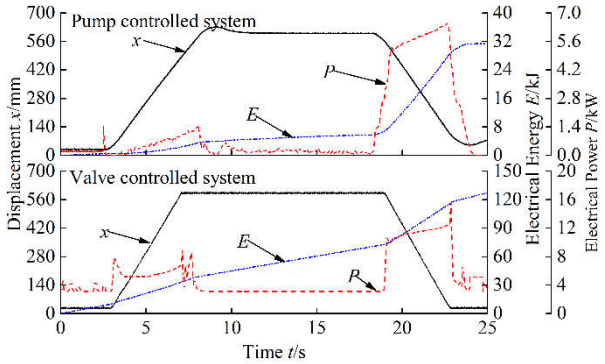

FIGURE.13 Energy consumption characteristics

CONCLUSION

(1) Compared with the system controlled by symmetrical pump, with an asymmetric pump, the load value and direction changing has no influence on the cylinder velocity without any feedback.
(2) The position closed-loop control combined with velocity feedforward is adopted, the error of steady-state control is small, only about 0.10 mm. The precision of position control is high enough to meet the automatic mining requirements.
(3) Compared with the separate metering in and metering out system, during cylinder extending, the energy saving ratio can be increased up to 87.0%. During cylinder retraction, the energy saving ratio can be increased up to 50.4%. And in a whole working cycle, the saving ratio can be increased up to 75.3%.

ACKNOWLEDGEMENT

The author(s) disclosed receipt of the following financial support for the research, authorship, and/or publication of this article: This work was supported by the National Natural Science Foundation of China (Grant Nos. U1510206 and 51575374).

REFERENCES

[1] Hippalgaonkar R., Zimmerman J., Ivantysynova M. Fuel Savings of a Mini-excavator through a Hydraulic Hybrid Displacement Controlled System[C] // Proceedings of 8th IFK International Conference on Fluid Power, Dresden, Germany, 2012, 2: 139-154.
[2] Sprockhoff V. Untersuchungen von Regelungen am hydrostaischen Zylinderantrieb mit Servopumpe[D]. RWTH Achen, 1979.
[3] Berbuer J. Neuartige Servoantriebe mit primärer Verdrängersteuerung[D]. RWTH Achen, 1988.
[4] Quan Z, Quan L, Zhang J. Review of energy efficient direct pump controlled cylinder electro-hydraulic technology[J]. Renewable & Sustainable Energy Reviews, 2014, 35:336–346.
[5] Kazmeier B. Energieverbrauchsoptimierte Regelung eines Elektrohydraulischen Linearantriebs Kleiner Leistung Mit Drehzahlgeregeltem Elektromotor und Verstellpumpe, Doctor Dissertation, TUHH, 1998.
[6] B. Johansson, P Kaus. Object Oriented and Distributed Modeling of a Multi-domain Aircraft Actuation System[C]// Proceedings of The Fifth International Conference on Fluid Power Transmission and Control, Hangzhou, China, 2001: 344-349.
[7] Lodewyks J. Differentialzylinder im Geschlossenen Hydrostatischen Getriebe[D]. RWTH Achen, 1994.
[8] Feuser A, Dantlgraber J, Spath D. Servopumpenantriebe Für Differentialzylinder[J]. Ölhydraulik und Pneumatik, 1995, 39(7) : 540-544.
[9] Daniel Boehm, Claus Hollander, Thomas Landmann. Hybrid-Antriebe bei Raupenbaggern – Konzepte und Losungen[C]// 3th Hybridantriebe fur Mobile Arbeitsmaschinen Fachtagung, Karlsruhe, Germany, 2011, 2: 117-124.
[10] Chen Mingdong, Zhao Dingxua, Ni Tao. Boom Energy-saving System with Closed Oil Circuit in Hydraulic Excavator[J]. Journal of Jilin University, 2012, 42 (5) : 1140-1144.
[11] Quan Lomg, Neubert T, Helduser S. Dynamic Performance of Electro-hydraulic Servo System with Speed Variable Pumps[J]. Chinese Journal of Mechanical Engineering, 2003, 39(02): 13-17.
[12] Quan Lomg, Neubert T, Helduser S. Research on the Static Performance of Electro-hydraulic Servo System with Speed Variable Pumps[J]. Chinese Journal of Mechanical Engineering, 2002, 38(03): 13-17.
[13] Rahmfeld R., Ivantysynova M. Displacement Controlled Linear Actuator with Differential Cylinder - A Way to Save Primary Energy in Mobile Machines[C]// Fifth International Conference on Fluid Power Transmission and Control, Ostrvav, Chech Republic, 2001: 296-301.
[14] 佐藤寛，油圧装置から制御阀、配管を取り去ったらどのょうな形になゐか，油空圧技术，2001, 6: 36-42

[15] 大場孝一，AC-サ-ボモ-タ直接驱动双方向回转ボンブにょゐ省ェネ油压サ-ボシステム，油空压技术，2001.6，52-57
[16] Ivantysynova M., Displacement Controlled Actuator Technology-future for Fluid Power in Aircraft and Other Applications[C]// Proceedings of the 3rd International Fluid Power Conference, Achen, Germany, 2002, 2: 425-440.
[17] Rahmfeld R., and Ivantysynova M. Energiesparender geregelter Linearantrieb mit Differentialzylinder[C]// Proceedings of the Second International Fluid Power Conference, Dresden, Germany, 2000, 1: 191-206
[18] Busquets E, Ivantysynova M. A Multi-Actuator Displacement-Controlled System with Pump Switching–:A Study of the Architecture and Actuator-Level Control[J]. Jfps International Journal of Fluid Power System, 2015, 8:66-75.
[19] Ivantysynova M. Innovations in Pump Design – What Are Future Directions?[C]// Proceedings of the 7th JFPS International Symposium on Fluid Power, Toyama Japan, 2008: 59 -64.
[20] Zimmerman, J.; Ivantysynova, M, Hybrid Displacement Controlled Multi-actuator Hydraulic Systems[C]// Proceedings of the 12th Scandinavian International Conference on Fluid Power, Tamper, Finland, 2011: 217-233
[21] Hippalgaonkar, R.; Zimmerman, J.; Ivantysynova, M. Fuel Savings of a Mini-excavator through a Hydraulic Hybrid Displacement Controlled System[C]. Proceedings of 8th IFK International Conference on Fluid Power, Dresden, Germany, 2012， 2 :139-154
[22] Williamson C, Ivantysynova M. Pump Mode Prediction for Four-quadrant Velocity Control of Valveless Hydraulic Actuators[C]// Proceedings of the International Symposium on Fluid Power, Toyota, Japan, 2008: 323-328.
[23] Wang Longke, Book W, Huggins J. A Hydraulic Circuit for Single Rod Cylinders[J]. Journal of Dynamic Systems Measurement & Control, 2011, 134(1): 335-339.
[24] JALAYERI E, Imam A, Tomas Z, et al. A throttle-less single-rod hydraulic cylinder positioning system: Design and experimental evaluation[J]. Advances in Mechanical Engineering, 2015, 7(5): 1-14.
[25] Huang J, Zhao H, Quan L, et al. Development of an asymmetric axial piston pump for displacement-controlled system[J]. ARCHIVE Proceedings of the Institution of Mechanical Engineers Part C Journal of Mechanical Engineering Science 1989-1996 (vols 203-210), 2013, 228(8):1418-1430.
[26] Zhang X, Quan L, Yang Y, et al. Output characteristics of a series three-port axial piston pump[J]. Chinese Journal of Mechanical Engineering, 2012, 25(3):498-505.
[27] Liu B, Quan L, Ge L. Research on the performance of hydraulic excavator boom based pressure and flow accordance control with independent metering circuit[J]. Proceedings of the Institution of Mechanical Engineers Part E Journal of Process Mechanical Engineering, 2016.
[28] Lei G, Dong Z, Huang W, et al. Research on the performance of hydraulic excavator with pump and valve combined separate meter in and meter out circuits[C]// International Conference on Fluid Power and Mechatronics. IEEE, 2015:37-41.

