The 10th JFPS International Symposium on Fluid Power FUKUOKA 2017 Oct. 24-27, 2017 The Japan Fluid Power System Society

NEW HIGH SENSITIVITY MEMS SENSOR FOR INDIRECT PRESSURE MEASUREMENT

Massimiliano RUGGERI*, Giorgio MASSAROTTI*, Esteban CODINA **

* CNR-IMAMOTER, National Research Council of Italy,
Institute for Agricultural and Earthmoving Machines,
Via Canal Bianco 28, 44124 Ferrara, Italy
(E-mail: m.ruggeri@imamoter.cnr.it)
** UPC. Universitat Politècnica de Catalunya. BarcelonaTech
Lab.Mec.Fluids Planta Baixa 0.10 C. Colom, 11 08222 Terrassa Spain..

Abstract. Sensorization of modern electro-hydraulic systems is one of the key technologies for system observability and controllability. Increasing needs for closed loop controls, high precision, power control and energy monitoring, diagnosis and safety concerns, ask for both pressure and flow acquisition in industrial and mobile applications. Pressure sensors need specific coupling systems for mounting, and both pipes and components must be modified to install pressure sensors. Traditional pressure sensors are related to mini-mess and to oil flow modification in the sensor area. Direct pressure measurement is often made using thin film sensors whose measurement principle is related to a strain measurement. Modern Silicon based technologies offer new solutions for a less invasive pressure measurement. Micro Electro-Mechanical Systems (MEMS) Technology is suitable to design new sensors for indirect pressure measurement. This paper present a new MEMS resonant sensor, for low strain measurement that can be successfully used to indirectly measure oil pressure acquiring component's strain measurement.

Keywords: Pressure Measurement, MEMS, DETF Strain Sensor, Gear Pump.

INTRODUCTION

The strain measurement technology in mechanical structures was developed through traditional strain gauges, whose optimal measurement range is around 1 mε/ε; traditional strain gauges signals are very complex to be measured near the zero-strain condition, due to very low signal/noise ratio, that obliged the electronic designers to realize complex analog stages in the electronic signal conditioning part of circuits (as shown in the example in FIGURE 1).

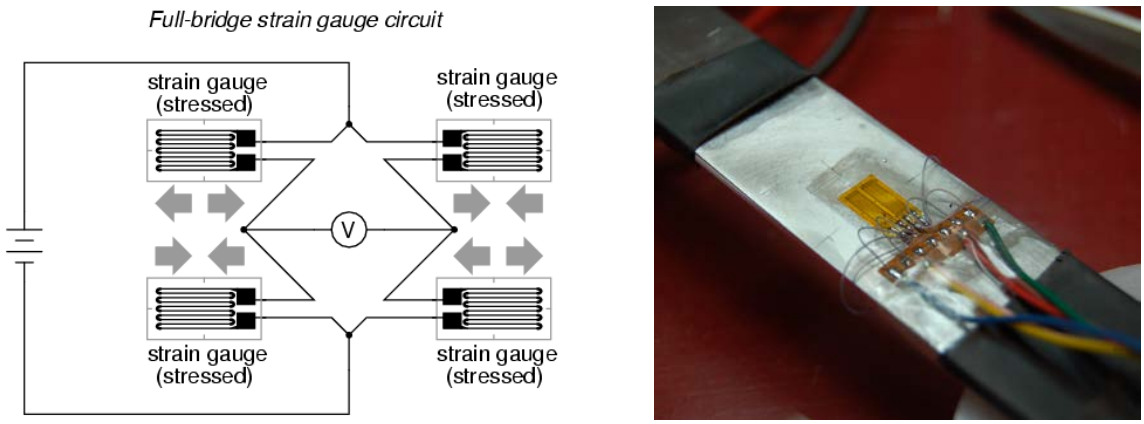

FIGURE 1. Typical Full Bridge configuration for Strain Gauges polarization and signal acquisition and one application example in a cantilever.

Based on sensitivity and measurement range, that are typically respectively 1 με/ε and 1 mε/ε, traditional strain gauges can be successfully applied in pipes and, in general, in components with thin mechanical structure, where strain is easily acquired.
The purpose of the research described in this paper is to use strain technology for pressure measurement in hydraulic components.

As it is known, thin film pressure sensors use the strain technology applied to a thin membrane inside a chamber connected with the oil flow in pipes and tubes. The same technology could then be applied to other mechanical parts, if these parts offer a similar level of strain.

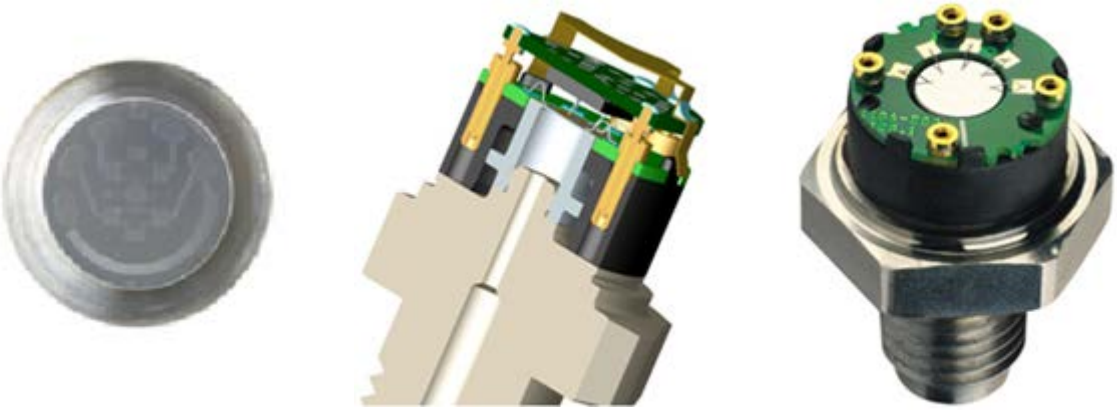

FIGURE 2. Senstronic Technology for Thin Film Pressure Sensors.

Unfortunately, due to need for reliability, robustness and resistance to stress and for durability, hydraulic components offer Thick-walled mechanical structures that prevent the measurement of pressure through the component's body strain. The Strain level is too low to be measured through traditional strain gauges with sufficient precision and sensitivity.
As a consequence, strain gauges can't be used in pumps, valves, and, in general, components where the body offer higher stiffness in respect to strain gauge sensitivity.
The paper aims to demonstrate the benefits of emerging MEMS sensing technologies for strain and indirect pressure acquisition.

MEMS-DETF TECHNOLOGY

In the last two decades MEMS sensors were developed in many topologies and the MEMS technologies are now complex and very precise, offering previously unseen solutions for mechatronic systems.
A MEMS DETF (Double Ended Tuning Fork) sensor is a silicon made diapason inside a chip and the technology is explained in [1] to [4] reference.
The DETF is a device consisting of two straight and parallel segments anchored at their ends, to the substrate.
On the sides of these segments are placed two fixed electrodes to which an electrostatic force to attract laterally the two parallel segments is applied. Applying a sinusoidal voltage to the fixed electrodes, a swing of the two parallel segments is induced, so that the oscillation of the mobile segments coincides with the resonance frequency imposed by the geometric characteristics of the device (F).

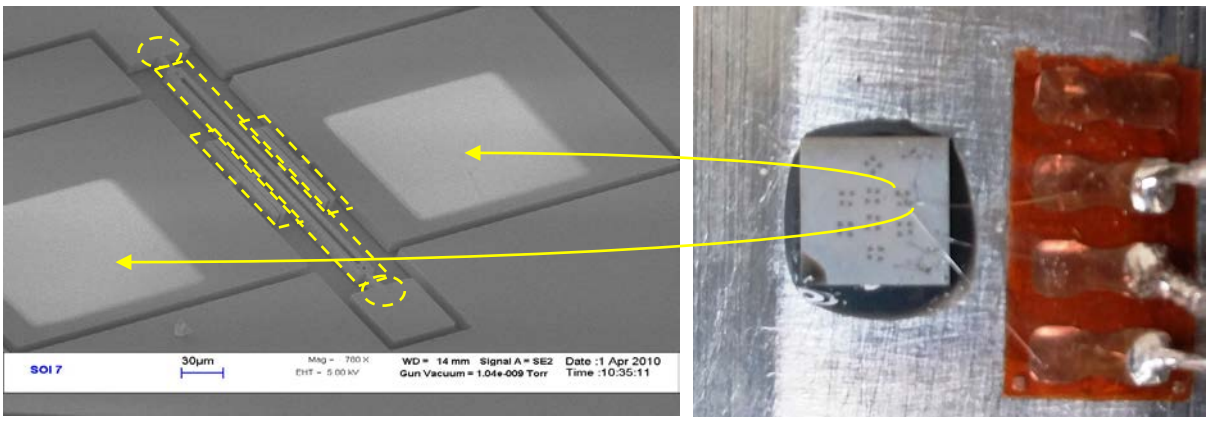

FIGURE 3. Electronic Microscope image of the Diapason of the DETF MEMS Sensor (left) and real chip with 8 DETF (right) where electrodes are visible and the arrows indicate the corresponding element in the left figure.

The resonance frequency of the MEMS sensor changes according to the stresses applied along the axial direction. Conceptually the working principle is equivalent to that of an elastic or a rope of guitar: increasing (or

decreasing) the mechanical effort along the axis, the mechanical resonance frequency increases (or decreases) accordingly (FIGURE 4).

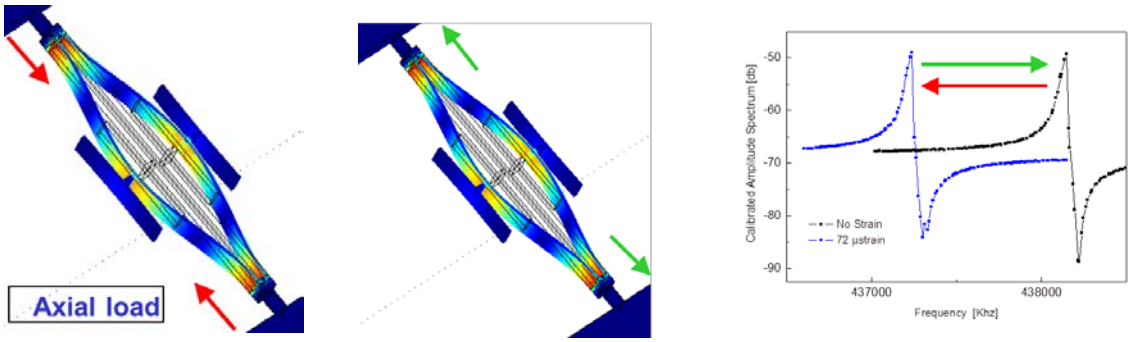

FIGURE 4. DETF MEMS Resonance Frequency Shift Working Principle under material strain. Compression (red arrow) and extension (green arrow) are directional in frequency shift.

The acquisition of the resonance frequency allows to measure the strain of the component and of the mechanical structure on which the sensor is mounted in a uniform manner.
The MEMS DETF used in the paper was conceived, designed and produced by the IMM - Institute for Microelectronics and Microsystems - of the National research Council of Italy.

MEMS-DETF Characteristics and Performance

The signal to be acquired is the oscillation frequency of the sensor that, based on the technology and component tuning, can be centered on 250 kHz to 380 kHz without strain at ambient temperature 20° C depending on the model and tuning of the MEMS sensor.
Due to its high resonance oscillation frequency, the sensor strain condition is revealed using an input capture function of a microcontroller, whose is able to calculate the time of a oscillation wave This digital electronic function is a device able to capture level change of electric signal that is compared with tunable thresholds and that is correlated with values of a high speed and high resolution counter, normally running at a frequency higher than the microcontroller frequency. Practically speaking it means that the waveform of the sensor vibration frequency is acquired at a frequency higher than 1.000 times the resonance frequency, enabling a very high resolution strain acquisition in a very short acquisition time. Thus virtually a single wave could lead to the strain value in a time equal to 1/Fosc = $2{,}7 \cdot 10^{-6}$ sec, where Fosc = 350 kHz and it is the resonance frequency of the sensor.
In the real Due to the noise and to the sensor it is better to use a series of continuous waves, in order to acquire a mean value in a short period of time.

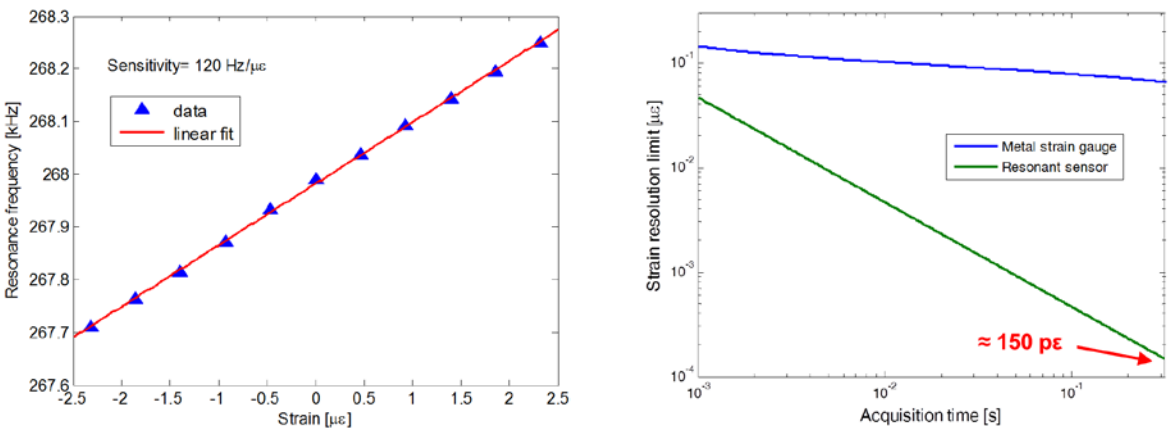

FIGURE 5. MEMS Sensor Linearity (left) and Sensitivity and precision (right) that is a function of acquisition time

The precision of the strain measurement is directly proportional to the number of samples acquired in stationary conditions, and the right number of waves shall be defined by the application.

In FIGURE 5 right, the relationship between sensor resolution and acquisition time is presented, where it can be noted that the sensor, using a 40 MHz microcontroller can reach a resolution of 150 pε/ε.
It can be proved that because of sensor characteristics it is suitable to be used in hydraulic components.

PRESSURE MEASUREMENT IN A GEAR PUMP

In order to demonstrate the potential of the MEMS DETF technology, a smart component was prototyped. The idea is to measure the pressure of the hydraulic fluid inside a component through and indirect measurement. In that case the measurement is based on the strain of the component induced by the internal pressure.
A gear pump was used, because is one of the most used components in hydraulic plants and because in most traditional hydraulic circuits traditional pressure sensors are used or are considered too costly or there is no enough space to install a traditional sensor.
To evaluate the real strain of the pump under pressure a functional analysis was performed and a FEM analysis was done, following also the study found on [5].
The objective of the analysis was to have a reliable evaluation of the pump body strain and to find the position of the pump body where to apply the strain measurement, based on the strain value.
In FIGURE 6 (left) the result of the FEM analysis performed over a real gear pump model is presented with a inner pressure of 250 bar, considering the void cavity but applying the pressure gradient as in the real condition of the pump running. It can be noted that the body strain is not symmetric due to the pump main function, where the delivery port is on the right in the figure. It can also be noted that the top of the pump offers a too high strain for the sensor, that is higher than 1 mε, while moving from the top the strain is proportionally reduced.
In FGURE 6 right it is shown that the sensor was mounted in the position chosen by the results of the FEM analysis, in order to apply the sensor in a region of the pump body where the calculated strain is optimal in respect to the sensor characteristics (no more than 300 με/ε at 250 bar), in order to have a good sensitivity and sensor resolution, without risk to reach the maximum allowed strain for the sensor, where the measure can go in overflow.

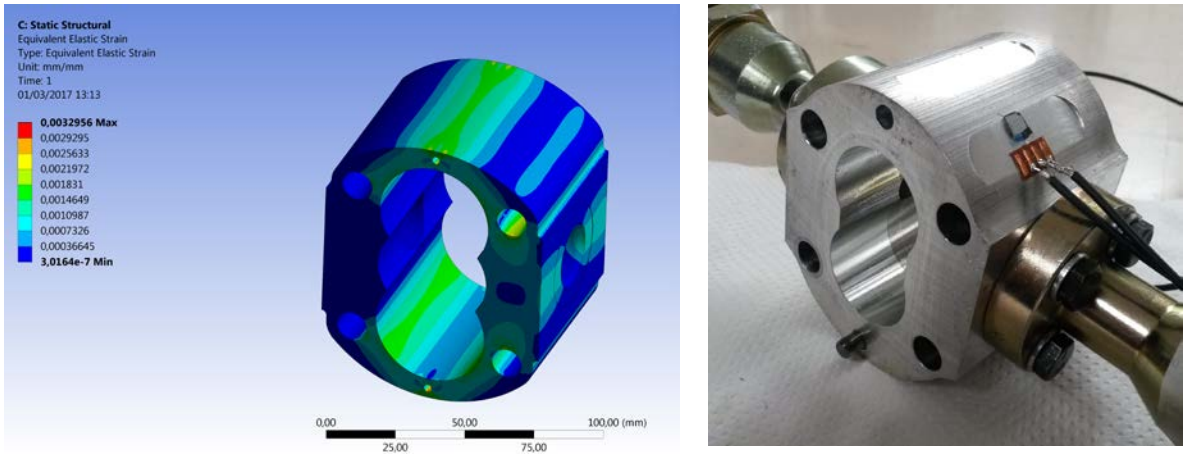

FIGURE 6. FEM of the Gear Pump Body and real Pump with Sensor Position Corresponding to the chosen area where strain is a good sensitivity sensor's range

Based on this study, the sensor was placed in a intermediate position between the top and the delivery port of the pump, in order to find a region with a maximum strain of 200 to 300 με. Experimental results in static conditions were presented in [6] and confirm the FEM analysis.
Based on the FEM analysis the surface of the pump was prepared, in order to have a plain surface of 8 mm wide, to apply the sensor with a proper glue. The prototype sensor mounting is very complex both for the glue choice and for the bonding operation, that directly connect the diapason electrodes on the MEMS component.
This operation will be comparable with the one used in traditional strain gauges in the industrial version of the component.
The sensor was coupled with a flexible small electric board where the small filaments (bonds) that are directly connected to sensors are connected to normal BNC cables, to bring signals to the electronic control circuit at 1,5 m distance (FIGURE 6 right and Figure 3 right).
The sensor was bounded manually using a proper tool and was tested before and after mounting the pump ports.
The small mass of the sensor and the bond was tested in similar application until 20 g acceleration.
The MEMS sensor shown in FIGURE 6 right (and FIGURE 3 right) is equipped with 8 DETF sensors at various angles in respect to the vertical direction but only one is connected and used.

THE TEST BENCH

For the tests two pumps were instrumented with the MEMS – DETF Sensor, a 3 cc and a 16 cc. In this paper the results obtained with the 16 cc gear pump are presented. This Pump was equipped also with a traditional strain gauge in equivalent position of the MEMS sensor, in order to demonstrate that in the same working conditions the traditional strain gauge doesn't offer a sufficient resolution and sensitivity.
The pump mounted in the bench and the particular of the sensors mounted in the pump body is presented in FIGURE 7.

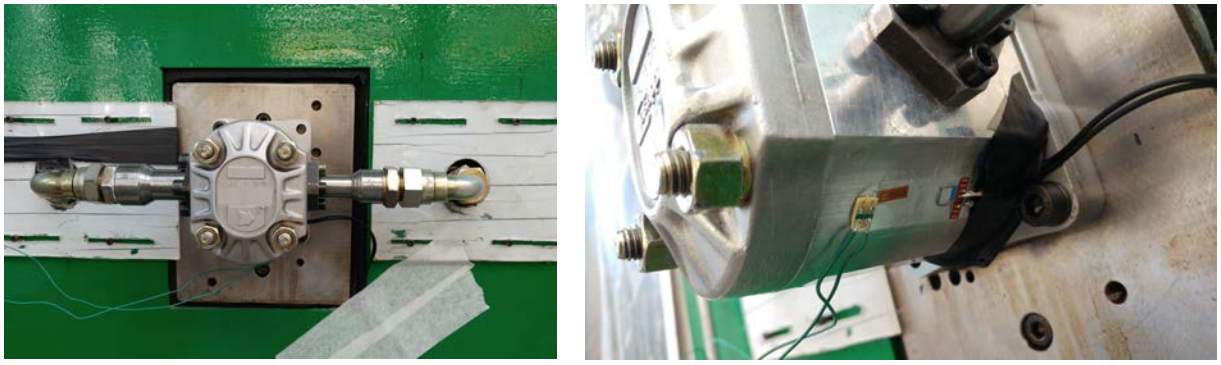

FIGURE 7. Gear Pump mounted in the Test bench with sensors cables and on the right the particular of the MEMS sensor and traditional Strain Gauge sensor mounted in the pump body.

Finally the pump was connected to hydraulic pipes and to a hydraulic bench capable of generate constant and variable pressure, with oil flow and capable to generate constant speed of the pump shaft. The test bench schematic circuit is presented in FIGURE 8 left, while in the right it is shown the test bench.

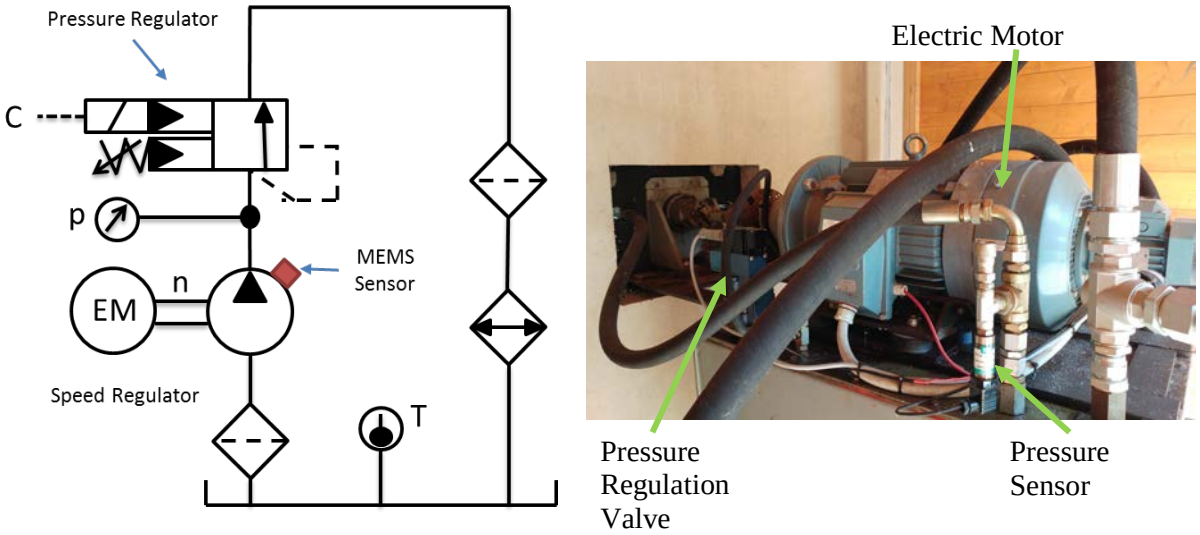

FIGURE 8. Test bench schematic Circuit with the Device Under Test and the real test bench image

The test bench was used to maintain the pump at a defined rotational speed, performing the tests at different regulated pressures.
Unfortunately the bench is not equipped with a system capable of maintain the oil at a constant temperature and this, as it will be shown in the test results, will introduce an uncontrolled variable in the strain measurement.
Due to oil temperature changes, the linearity of the sensor, proved in [6] can be reproduced because of dynamic conditions.

TESTS DESCRIPTION AND TEST RESULTS

Preliminary tests were performed in order to understand the MEMS sensor and the connected electronic control system speed and resolution.

In the FIGURE 9 it is presented an image of the acquisition of the pump strain signal at low speed (200 rpm), where it is visible the strain ripple generated by the pump gears pressure ripple.

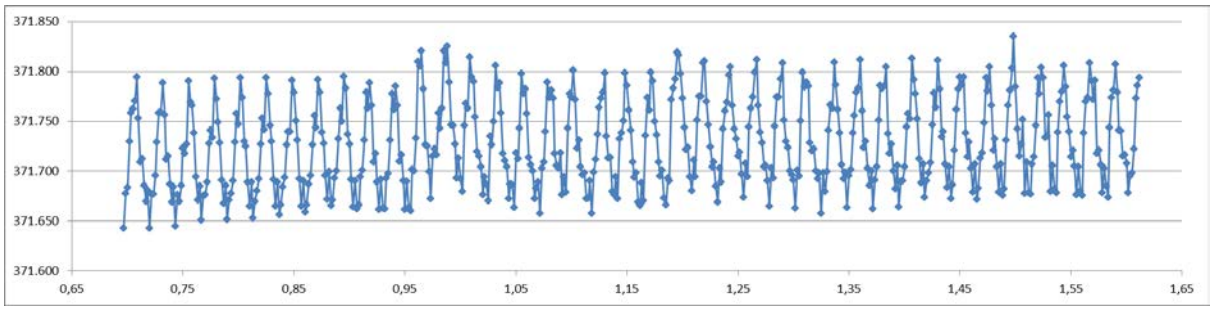

FIGURE 9. Strain (and Pressure) ripple of the pump's gears at constant speed of around 200 rpm the X axis is the Time (s) and Y axis is the resonance Frequency of the sensor (Hz).

The number of samples can be changed and the strain ripple can be acquired at all the speed range of the pump. This Figure demonstrates the sensibility of the sensor and the opportunities that this technology can offer if applied on the components. It can be noted that the pressure ripple generated by the pump gears
Also the dynamic characteristic of the sensor was preliminarily tested and in FIGURE 10 a transient from 5 to 20 bar is shown.

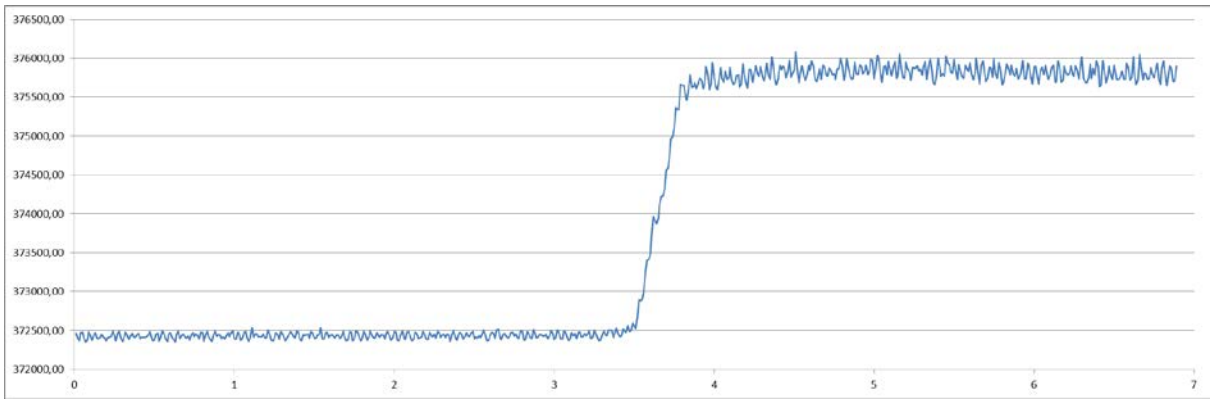

FIGURE 10. Transient from 5 to 20 bar at 600 rpm. the X axis is the Time (s) and Y axis is the resonance Frequency of the sensor (Hz).

The main test series was performed in order to characterize the strain sensor in respect to pressure, in order to evaluate the relationship between pump inner pressure and pump body strain. Test were carried out starting from different temperatures and applying constant speed and constant pressures to the pump, in order to measure and acquire the pump strain in stationary conditions, because of the objective of mapping the pump strain and the sensor characteristics.
This experiment offered very good results at low pressures, while at higher pressures the stationary pressure generated in the delivery port of the gear pump provoked the oil temperature increase during the stationary test, changing the temperature of the oil and of the pump in the area of the delivery port. The Oil Temperature and, as a consequence, the Pump Body Temperature, introduced a independent variable in the tests that made difficult to prove the pump body strain linearity as a function of pressure, but the sensor still demonstrated its high resolution.
Test were performed maintaining the pressure constant at delivery port of the pump and the revolution speed of the pump also constant, in order to acquire a big number of data from the sensor and to evaluate a mean value for the strain. This is need both for validate stationary conditions and for the characteristic of the sensor, whose output is an oscillating signal at the resonance frequency of the DETF structure.
In FIGURE 11 are shown the pump strain characterization at two different oil temperatures in test sessions with oil pressure rise – on the left -, and oil pressure drop – on the right.
The tests show a very good sensor sensibility and resolution in respect pressure in the entire pressure range of [0, 250] bar, while the linearity of the measure is affected by the strain addictive due temperature transient as a consequence of oil resistance due to the high pressure.

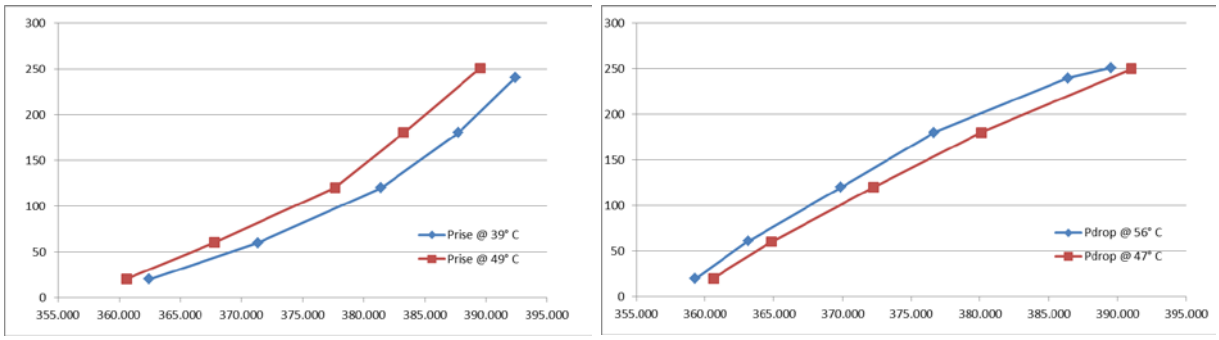

FIGURE 11. Stationary characterization of the Pump Strain at different pressures and oil temperatures at 1000 rpm.

It can be noted that the linearity is more affected by the temperature change effect in the left figure, where the test started from 39°C of oil temperature, while at the end of the test the measured oil temperature in the circuit at the delivery port was 51°C and in the second test started from 49°C of oil temperature, while at the end of the test the measured oil temperature in the circuit at the delivery port was 57°C.
During the tests carried out reducing the pressure by stationary steps of 10 to 15 seconds, the linearity of the strain as a function of the oil pressure is less affected by the change of oil temperature, due to the thermal inertia of the oil and of the metal of the pump. In fact the test started at 54°C and ended at 49°C with around half of the temperature transient in respect to the tests performed rising the pressure through stationary steps of 10 seconds each
In TABLE 1 it is presented the result of the calculation performed by the data collected during the tests The most remarkable data is that the sensor offers a resolution of more than 100 Hz/bar in all pressure condition. This lead to a virtual resolution of 0,01 bar through the strain acquisition, without need of pressure ports in the component or in the circuit.

TABLE 1. Resolution in Hz/bar for the strain sensor and linearity analysis in the pressure drop stationary tests at 39°C

Pressure [bar]	**20,4**	**60,4**	**120,2**	**180,2**	**250**
Resonance f [Hz]	360616,63	364838,15	372253,26	380108,94	391025,82
F(x)-f(x-1) [Hz]	-	4221,51	11636,63	19492,31	30409,18
Hz/bar resolution	-	105,54	116,60	121,98	132,44

Linearity is not a must, because using electronic control systems it possible to generate non-linear transfer function to manage sensor data, but the temperature of the pump body near the sensor area acquisition is a must, as it is demonstrated by the data, where strain and then pressure interpretation, is affected by the thermal strain of the pump body.
In order to understand the thermal strain another series of test were carried out, measuring the pump strain at different temperatures at the same pressure at pump port. The results are presented in TABLE 2 where it can be noted that at the same pressure at different Temperatures the pump body strain is different. And the sensitivity of the sensor for thermal strain is higher than the one for pressure strain (2000 Hz for 3°C, 686 Hz/°C).

TABLE 2. Thermal Strain effect at constant pressure and constant pump speed (1000 rpm).

Resonant Frequency[Hz]	**Pressure[bar]**	**Temperature[°C]**
356713,56	20,40	54,00
365072,57	119,50	54,00
381317,94	249,20	54,00
358775,30	20,70	51,00
367133,21	119,50	51,00
383339,70	248,00	51,00

The results are graphically presented in FIGURE 12. In the Figure it can be noted that the thermal strain represents an important part of the whole strain acquisition process and it can't be neglected if the MEMS Strain sensor is used as a pressure sensor.

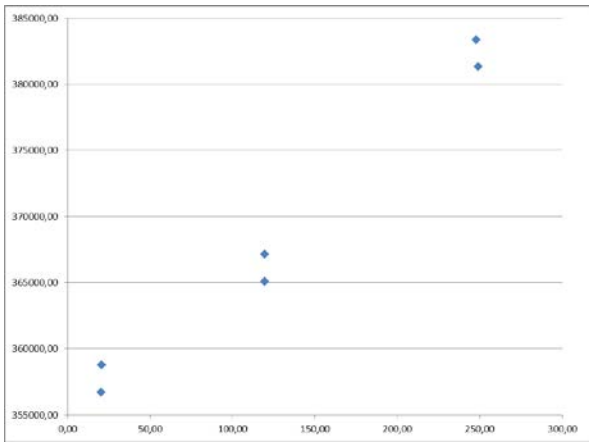

FIGURE 12. Thermal Pump Strain Characterization at different pressures and oil temperatures at 1000 rpm.

But the most important data to be noted is that he thermal strain seems to be constant at different pressures, then it can be mapped if the temperature is acquired contextually with the strain.

CONCLUSIONS

The paper presents the first experiences in a dynamic bench, performing the strain measurement through the new MEMS DETF sensor. The tests demonstrate that the sensor sensitivity and resolution are suitable to be applied to hydraulic components. The test also show that the thermal strain effect is very important and that this effect can't be neglected if the sensor is used as a pressure sensor.
The good news is that temperature acquisition is not a problem and that in the next version of the sensor a floating resonator will be added, to measure the temperature in the component, and thus in the pump body in the sensor area.
The important result is that a new class of sensor was designed and realized, that could be disruptive for hydraulic components, allowing to measure, pressure, temperature, strain and also pressure ripple, from the external side f the components, without any need of pressure ports, then without altering the oil flow. This class of components could also be used to understand if the component strain is normal or excessive in the working condition, thus preventing breakages of components and being part of a predictive diagnosis system. Many activities are planned for the MEMS – DETF sensor and its application on different class of components will be presented soon to the international fluid power community.

ACKNOWLEDGMENTS

The research is carried out under the project "NANOMEMS-X, NANO-structured MEMS Sensors for Strain Applications", project ccode CUP B52I16000120009, financed in the POR-FESR Regione Emilia Romagna 2016-2020 Program in Italy based on European Funding for Regional Development..

REFERENCES

1. FERRI M., MANCARELLA N., BELSITO L., RONCAGLIA A. et al., Strain sensing on steel surfaces using vacuum packaged MEMS resonators, in Procedia Engineering 5:1426-1429, December 2010, 2.
2. FERRI M., BELSITO L., MANCARELLA N., RONCAGLIA A. et al Fabrication and testing of a high resolution extensometer based on resonant MEMS strain sensors, 16th International Conference Solid-State Sensors, Actuators and Microsystems 2011 (TRANSDUCERS), DOI: 10.1109/TRANSDUCERS.2011.5969171
3. BELSITO L., FERRI F., MANCARELLA N., RONCAGLIA A., Fabrication of High-Resolution Strain Sensors Based on Wafer-Level Vacuum Packaged MEMS Resonators, Article in Sensors and Actuators A Physical 239, January 2016, DOI: 10.1016/j.sna.2016.01.006.
4. BELSITO L., et AL., High-resolution strain sensing on steel by Silicon-On-Insulator flexural resonators fabricated with chip-level vacuum packaging, Transducers & Eurosensors XXVII: The 17th International Conference on Solid-State Sensors, Actuators and Microsystems, 2013, DOI: 10.1109/Transducers.2013.6626936.
5. 5. KOLLEK W., RADZIWANOWSKA U., Energetic efficiency of gear micropumps, Archives of Civil and Mechanical Engineering, 15 (2015) pp. 109-115, DOI: 10.1016/j.acme.2014.0
6. RUGGERI M., MASSAROTTI G., BELSITO L., RONCAGLIA A., Indirect Pressure Measurement On Hydraulic Components Through Traditional And New Strain Sensors, FPMC – ASME 2017, Sarasota (USA) paper number 4355, October 16 – 19 2017. Under Publication.

