Development of autonomous continuous pH-alkalinity analyzer deployable to BGC-Argo float

*Hajime Kayanne[1], Shoji Yamamoto[2,1], Nori Fujita[1], Yukari Sato[2], Toshiaki Asakai[2], Yohei Kayukawa[2], Akihide Hemmi[4], Haruko Kurihara[3], Andrew Dickson[5]

1. the University of Tokyo, 2. Agency of Industrial Science and Technology, 3. University of the Ryukyus, 4. Möbius Advanced Technology Ltd, 5. Scripps Institution of Oceanography

Measurement of two variables among measurable four (pH, CO_2, total inorganic carbon and alkalinity) is necessary to determine the carbonate system in the ocean, fundamental to evaluate Ocean Acidification and carbon absorption capacity. A combination of pH-alkalinity provides most accurate result, however alkalinity has been measured by titration in laboratory for discrete samples. We have developed a flow-through analyzer to measure seawater pH and alkalinity. First, seawater sample is introduced to a flow channel by peristaltic pump, and its electric potential is measured by ISFET, then HCl is added and mixed with the sample within the flow line and its potential is measured by the other ISFET. They are calibrated by measurement of three different certificated reference materials (CRM) in the same line to obtain pH and alkalinity values with a repeatability of 0.002 and 1.5 μmol kg^{-1}, respectively, equivalent to laboratory titration. The system was deployed on a shallow reef flat and measured pH-alkalinity continuously and autonomously. Based on the same conceptual design, and by minimizing the size by applying μ-TAS, we will develop an autonomous continuous pH-alkalinity analyzer deployable to BGC-Argo float. The power consumption and weight will be reduced to 1W and 1kg, respectively. The flow system and CRM/HCl will be packed in Hydrochlorofluorocarbon and seawater, respectively with their buoyancy sustained to the outside pressure. Pressure dependency of ISFET and the dissociation constants of carbonate system will also be investigated. Deployment of this system will reveal spatial and temporal change in the carbonate system in the ocean.

Keywords: Argo float, Ocean Acidification, alkalinity

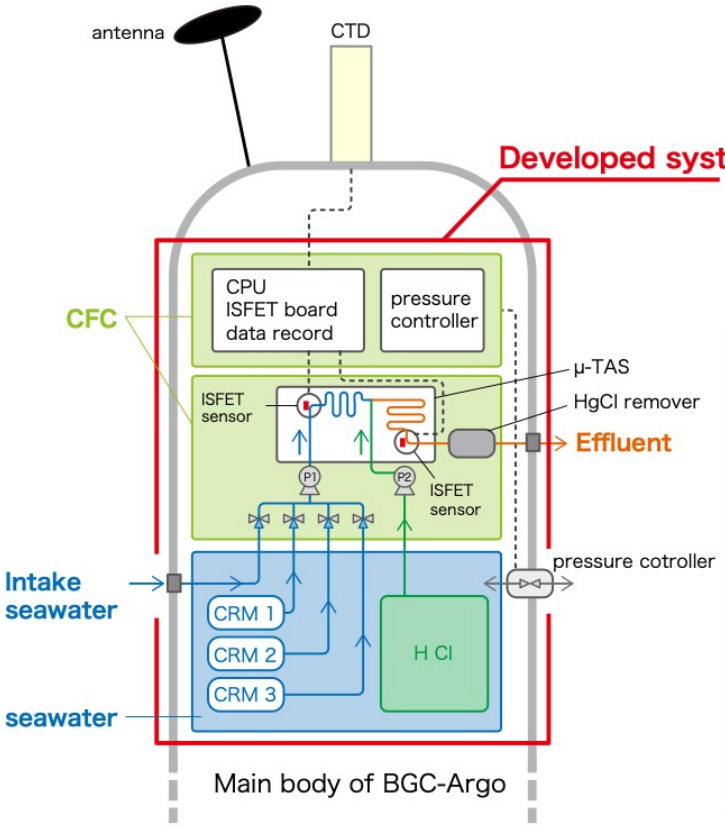

[Objective spec]

depth: 1000m
automated operation
pH-alkalinity
accuracy
pH: 0.002
alkalinity: 2μmol kg^{-1}
μ-TAS flow system
calibrated by CRMs