29a-G7-8

Analysis of Microbolometer Operation by Electro-thermal Circuit Simulation

Shizuoka Univ.,　°Ajay Tiwari, Hiroaki Satoh, Makoto Aoki, Masanori Takeda,

Norihisa Hiromoto, and Hiroshi Inokawa, *E-mail: inokawa06@rie.shizuoka.ac.jp

An antenna-coupled bolometer is anticipated as a high-sensitivity room-temperature-operating detector at around 1 THz, where the conventional absorber becomes too large to be structurally supported and thermally isolated[1, 2]. Moreover such microbolometers have been equipped a thermistor which itself is a heater to absorb electromagnetic wave so far, but it has an advantage in the high sensitivity to optimize the thermistor and the heater independently by separating electrically but combining thermally each other[1]. In order to evaluate the possibility of such a detector, an integrated heater and thermistor is fabricated, and its operation is analyzed.

The microscopic pattern of fabricated Ti microbolometer is illustrated in Fig. 1. The thermistor and heater have separate voltage and current terminals, and are isolated from the substrate by the cavity beneath.

To establish the correlation of the observed Ti microbolometer's responsivity, electro-thermal circuit simulation was carried out. The unit circuit representing heater/thermistor line with length ΔL, thermal resistance r_t, thermal capacitance c_t, electrical resistance r_e, and its temperature coefficient α is shown in Fig. 2(a), and the entire circuit including the heat loss through the thermistor and heater voltage-terminal leads is depicted in Fig. 2(b). Transient analysis was performed with sinusoidal input to V_{in} using SPICE circuit simulator, and the temperature amplitude at T_c was converted to the thermistor output.

The static (DC) responsivity of the Ti microbolometer predicted by our analytical model, which was adapted from the one by Zhang et al.[3] for our microbolometer, shows opposite trend from the experimental result. This discrepancy could be explained by our electro-thermal circuit simulation as demonstrated in Fig. 3. At low frequency, simulated and analytical results match very well, and conversely at higher frequencies, the simulated trend shifts towards the experimental results. It can be concluded that microbolometer with longer heater showed smaller responsivity due to the slower response for the measurement frequency.

References

1) M. Hiromoto, "Terahertz detectors and sensing for the ground use" 9th Takayanagi Kenjiro Memorial Symposium & 4th International Symposium on Nano Science (Hamamatsu, Japan, Oct. 30, 2007) .

2) F. Simoens et al., "Active imaging with THz fully customized uncooled amorphous-silicon micrbolometer focal plane arrays," 36th Int'l Conf. Infrared Millimeter waves and THz waves (IRMMW-THz 2011), W2D.4 (2011)

3) Shu Zhang, Yizhang Yang, Sadegh M. Sadeghipour and Mehdi Asheghi, "Thermal Characterization of the 144 nm GMR Layer using Microfabricated Suspended Structures," Proceedings of ASME Summer Heat Transfer Conference, paper HT 2003-47270 (Las Vegas, Nevada, USA, July 21-23, 2003).

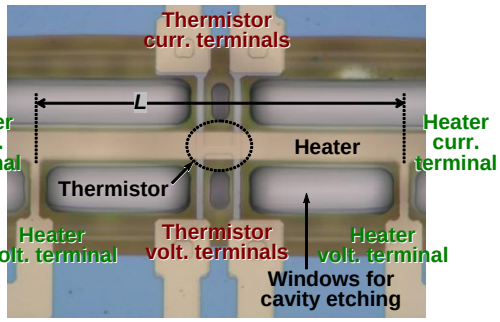

Fig. 1 Optical micrograph of the bolometer. Heater length L is 200 μm in this case.

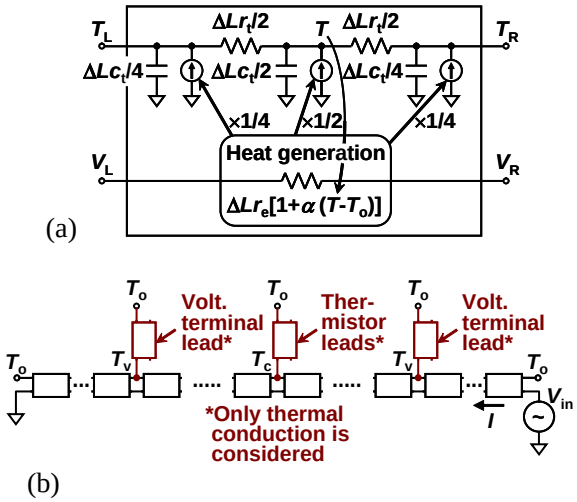

Fig. 2 Electro-thermal circuit for simulation.
(a) Unit circuit, and (b) entire circuit.

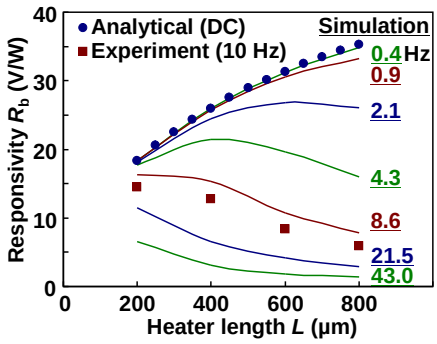

Fig. 3 Responsivity with respect to heater length.