17a-PA3-7

A 2-12 GHz 1 mW 65 nm CMOS Double Pole Eight Throw Switching Matrix

Azhari Afreen, Takumi Sugitani, Kenta Sogo and Takamaro Kikkawa

Research Institute for Nanodevice and Bio System, Hiroshima University, 1-4-2 Kagamiyama, Higashi Hiroshima, 739-8527, Japan. E-mail: {afreen-azhari,kikkawat}@hiroshima-u.ac.jp

1. Introduction

A new 2-12 GHz double pole eight throw (DP8T) switch was developed on 65 nm CMOS technology for ultra wide band (UWB) radar based impulse radio communication. The schematic and die photograph of the switch have been shown in Fig.1 and Fig.2, respectively. All the 8 output ports are divided into Group1 and Group2, connected to Tx and Rx ports by 1P2T_Tx and 1P2T_Rx switches. When one output port of a group is connected with Tx port, another port from Group2 is connected with Rx port, simultaneously. Thus it can be used in a radar-based transceiver system to operate eighth UWB Tx/Rx antennas at output ports.

2. Results

Measured average insertion losses are 5.2 dB, 7 dB and 10 dB at 2 GHz, 6 GHz and 10 GHz, respectively (Fig 3). Fig. 4 shows the measured input and output return losses, S11 and S22 from Tx to Ant1g1 which is >10 dB from 2 to 12 GHz. The measured isolation from Tx to Rx port is > 35 dB (Fig.5)

3. Conclusion:

A 65 nm CMOS 5.2 to 10 dB insertion loss, 35 dB isolation, Tx/Rx DP8T switch has been developed, from 2 to 12 GHz, for short range radar based transceivers. The switch consumes 1 mW power from 1.2 V power supply , with a die area of 1.96 mm X 1.53 mm　including all RF and ESD protected DC pad.

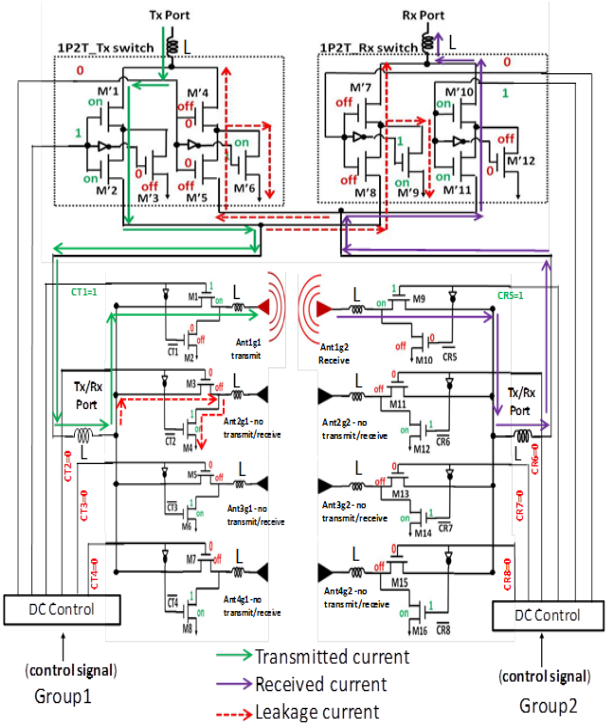

Fig. 1. Schematic diagram of the DP8T switch.

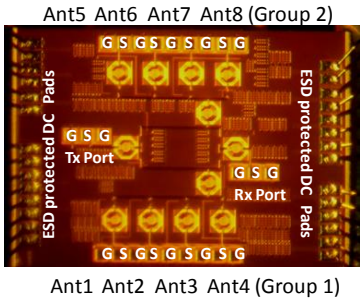

Fig. 2. Chip die photograph of DP8T on 65 nm CMOS Technology.

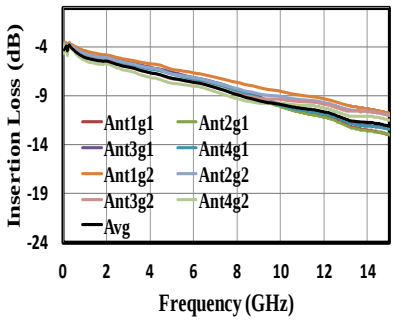

Fig. 3. Measured insertion loss from Tx port to all output ports.

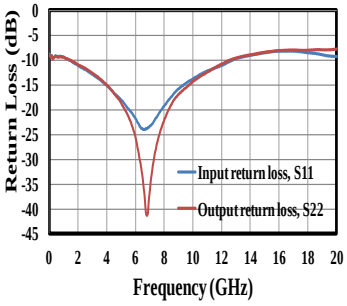

Fig. 4. Measured input return loss, S11 and output return loss, S22 from Tx port Ant1g1

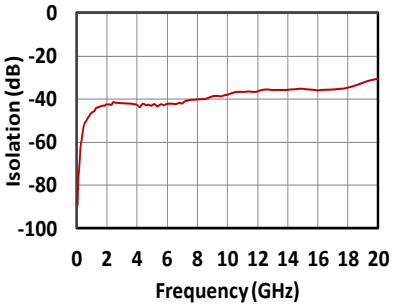

Fig. 5. Measured isolation from Tx port to Rx port