Stochastic Resonance in Single-Electron Inverter Improved by Attachment of Input Discretizer

[1]Dept. Engineering Science, The Univ. of Electro-Communications (UEC Tokyo), [2]CREST, JST

Huong Tran[1], Hiroshi Shimada[1], Yoshinao Mizugaki[1,2]

E-mail: huongtran@uec.ac.jp

1. Introduction

The property of noise-enhanced signal transmission through stochastic resonance has been observed in a wide variety of nonlinear systems. In this paper, we propose to improve stochastic resonance of a single-electron (SE) four-junction inverter (FJI) [1] by utilizing an SE input discretizer (ID) [2].

2. Stochastic resonance of a SE ID-FJI

Figure.1 shows the diagram of an SE FJI with an ID (ID-FJI) [3]. The discretized charge Q_0 in the ID makes the switching characteristics sharp, which is expected to enhance the signal-detection ability through stochastic resonance. Monte-Carlo simulation was executed with following conditions. ID: J_0 (1 aF, 100 kΩ), C = 72 aF; FJI: J_1 & J_4 (1 aF, 100 kΩ), J_2 & J_3 (2 aF, 50 kΩ), $C_{g1} = C_{g2}$ = 8 aF, $C_{b1} = C_{b2}$ = 7 aF; V_s = 6.7 mV, C_{out} = 1 fF, T = 0 K, no co-tunneling. Input-output characteristics of both the solo- and ID-FJI are presented in Fig. 2.

We evaluated the correlation coefficients between the rectangular input signal and output voltage response under Gaussian noise with various standard deviation σ with keeping its mean value μ as 0, the results of which are shown in Fig. 3. Strict thresholds of the solo FJI and the ID-FJI, θ_s, (below which the outputs are strictly unresponsive) [4] are 2.828 mV and 3.389 mV, respectively. With the same normalized input signal V_{in}/θ_s = 0.995, the peak of correlation coefficient of the ID-FJI (−0.957) is significantly better than that of the solo FJI (−0.627).

3. Conclusion

The ID-FJI with sharper switching achieves better stochastic resonance than the solo FJI.

References

[1] J. R. Tucker, J. Appl. Phys., **72** (1992) 4399.
[2] Y. Mizugaki, et al., IEEE Trans. Nanotech., **7** (2008) 601.
[3] H. Tran, et al., JSAP 75th Autumn Meeting, 19a-A7-5, 2014.
[4] F. Chapeau-Blondeau and X. Godivier, Phys. Rev. E, **55** (1997) 1478.

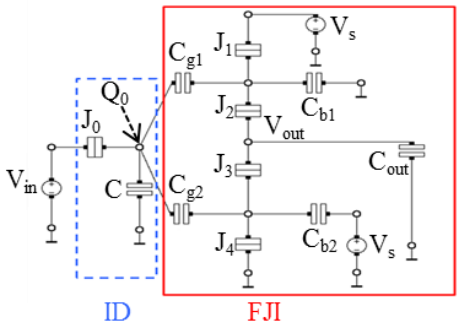

Fig. 1. Diagram of an SE ID-FJI

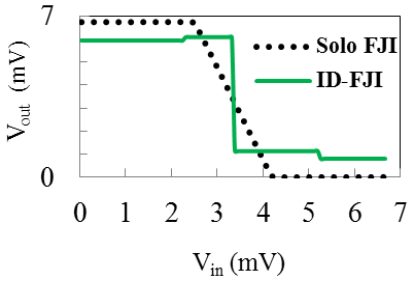

Fig. 2. Characteristics of a solo FJI and an ID-FJI.

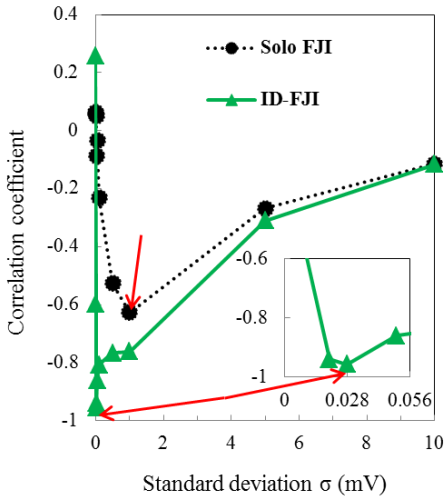

Fig. 3. Correlation coefficients of the solo FJI and the ID-FJI. Arrows (red color) show peaks of correlation coefficients.