A phenomenological model for the helicity dependent photocurrent in a ferromagnet – insulator – semiconductor junction

Imaging Science and Engineering Laboratory, Tokyo Institute of Technology,
°R. Roca, N. Nishizawa, T. Matsuda, and H. Munekata
E-mail: ronel.roca@isl.titech.ac.jp

A spin photodiode (PD) with a ferromagnet (FM) – insulator (I) – semiconductor (SC) junction exhibits a helicity dependent photocurrent response because of the combination of the optical selection rule at the active region and the spin-dependent tunneling at the FM–I–SC junction. Reported in this paper is a model based on two spin channels that aims at analyzing the helicity dependent response previously reported for Fe–x-AlO$_x$–*n*-AlGaAs in ref [1], and possibly providing insight on design guidelines for improving spin PD performance.

The equivalent circuit of the spin PD is shown in Fig. 1. The model postulates that spin polarized current generated by the illumination of circularly polarized light (CPL) on a *pn* junction is split into two independent spin channels R↑ and R↓ which incorporate spin-dependent tunnel resistance across FM–I–SC junction. Here, the PD is assumed to supply a constant voltage V_{total}. This is consistent with the ideal diode equation [2], when the load resistance R_{load} is high. The optical selection rule in a zincblende semiconductor is used to account for the difference in carrier generation rates in the PD. Furthermore, it is assumed that the spin polarized current undergoes spin scattering in the transport layer. Naturally, at the I–SC interface, the spin polarization is reduced from P_0 to P' by a factor γ. During tunneling, the spin is assumed to be conserved, and a Julliere type tunneling is used to model the FM-I-SC junction [3].

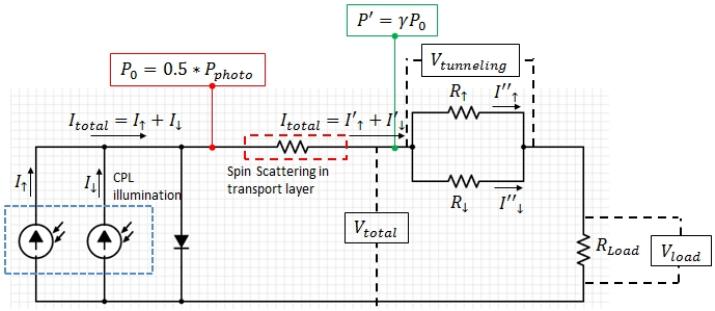

Fig.1: Equivalent circuit for a spin PD consisting of two independent spin channels R↑ and R↓ which incorporate the tunneling resistances. The PD-junction system is connected to an external load (R_{load}).

Combining the PD transport and tunnel magnetoresistance models, we are able to express the helicity dependent photocurrent with Eq.(1).

$$I_{total} \approx \frac{V_{total}}{(R_{tunneling} + R_{load})} = \frac{V_{total}}{\left[\left(\frac{R_0}{1 + 0.5 * \gamma P_{photo} P_{FM}}\right) + R_{load}\right]} \qquad (1)$$

where $R_{tunneling}$ is total resistance of FM-I-SC junction, R_0 is the resistance for non-polarized current, P_{photo} is the polarization of the light (e.i. $-1 \leq P_{photo} \leq +1$, $P_{photo} = 0$ for linear polarization, $P_{photo} = -1$ or +1 for left and right hand CPL respectively), and P_{FM} is the spin polarization of the ferromagnetic contact. In the limits of this report, R_0, V_{total}, and γ are treated as phenomenological parameters that can be extracted from experimental data reported in ref [1].

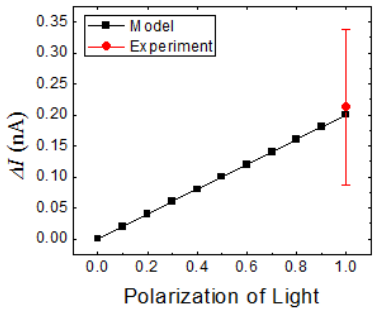

Fig. 2: Comparison of experimental and calculated helicity dependent photocurrent for γ = 0.4 %, V_{total} = 6.5mV, R_{load} = 10 kΩ, and R_0 = 3 kΩ. The light intensity is I = 2.5W/cm^2.

Shown in Fig. 2 is comparison of the experimental [1] and calculated helicity dependence of the photocurrent. Here, $\Delta I\,(P_{photo}) = |I_{total}\,(+P_{photo}) - I_{total}\,(-P_{photo})|$. Reflecting a small value of the helicity dependent photocurrent ~0.2nA, γ = 0.4 % has been extracted from the comparison. Fig. 3 shows the photocurrent I_{total} for different values of γ. It can be seen that the helicity dependent response increases with γ. A value of γ = 9% at least is necessary to achieve a $\Delta I/I_{total}$ = 1%. However, it should be noted that at γ > 0.5, the response becomes nonlinear, which is not desirable for a sensor.

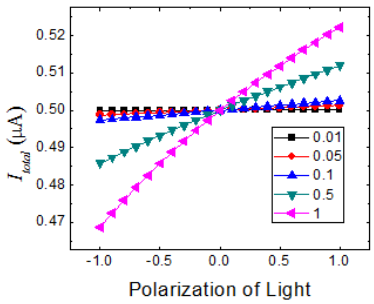

Fig. 3: Normalized photocurrent for γ = 0.01, 0.05, 0.1, 0.5, and 1. All other parameters are kept unchanged.

[1] H. Ikeda *et al.*, J. Magn. Soc. Jpn. **38**, 147 (2014)
[2] M. Green, "Solar cells", N. Holonyak, Jr. (Ed.), Prentice-Hall, Inc., New Jersey (1982).
[3] J. Fabian *et al.*, Acta Phys. Slovaca, **56**, 4-5, 565 (2007).