Influence of Pumping Noise on Thulium-doped Fiber Lasers

°Yu Wang[1], Sze Yun Set[1], Shinji Yamashita[1] (1.The Univ. of Tokyo)

E-mail: wangyuhit13@cntp.t.u-tokyo.ac.jp

Fiber lasers at the wavelength of 2μm offer exceptional advantages for free space applications compared to conventional systems that operate at 1.55μm or 1.06μm. The features of eye-safe wavelength and low loss in atmosphere give them a great market potential for LIDAR (Laser Imaging Detection and Ranging) , gas sensing systems and direct optical communication applications. For those applications, low noise operation is very important. Thulium-doped fiber (TDF) is a gain fiber for the wavelength of 2μm which is usually pumped at the wavelength of 1570nm or 790nm. The life time of the upper laser level ($^3F_4$) of Tm^{3+} is around 500μs, which is much shorter than that of the upper laser level of Er^{3+} (8~10ms) and Yb^{3+} (1~2ms). Therefore, the noise of pump, or the modulation on pump, have more influence on TDF lasers than Erbium-doped fiber (EDF) lasers and Ytterbium-doped fiber (YDF) lasers. For those EDF lasers and YDF lasers, the noise of pump is not usually taken in to account as they have long life time. Here, for the first time to our knowledge, we investigate the influence of pumping noise on TDF lasers. The result shows that the noise of pump, or the modulation of pump should be taken into account when we design a TDF laser.

Fig. 1 is the scheme of the experimental setup. a length of TDF, a wavelength-division multiplexing (WDM) coupler, a isolator and a 50/50 coupler constitute a ring cavity. The TDF is pumped by a tunable laser which is set at the wavelength of 1570nm and a C-band EDFA. The tunable laser is modulated by a function generator. The output of the laser cavity is detected by a photo-detector (PD) connected to a RF spectrum analyzer.

Fig. 2 shows the RF signal when the modulation frequency was 1MHz. The clear peak on the 1MHz indicates that the modulation of the pump can be detected through the laser output, which is not available in EDF lasers. Fig. 3 shows the influence of modulation index of the pump on the relative sideband intensity (RSI) when the modulation frequency was 1MHz. The RSI is defined by the modulation sideband power normalized to the average power level. The RSI is linearly dependent on the modulation index between 20%~60%. Fig. 4 shows the influence of modulation frequency on the RSI when the modulation index was 50%. This result shows that as the modulation frequency increases, the influence of the modulation of the pump on the laser output decreases, which is limited by the life time of the upper laser level.

Our results show that the pumping noise should be taken into account when we design a TDF laser. It also indicates that we can apply the modulation of pump to achieve active mode-locked TDF lasers or improve the jitter of TDF pulse lasers through proper feedbacks on the pump.

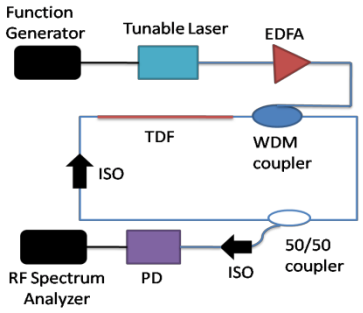

Fig. 1. Scheme of the experimental setup

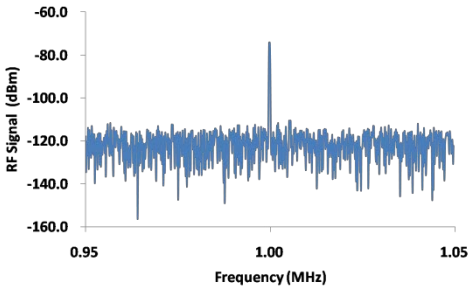

Fig. 2. RF signal of the output when the modulation frequency was 1MHz

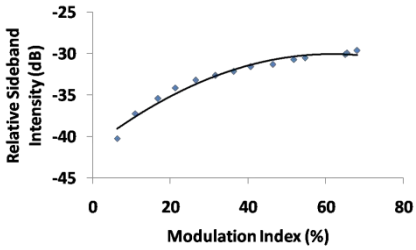

Fig. 3. The influence of modulation index of the pump on the RSI when the modulation frequency was 1MHz.

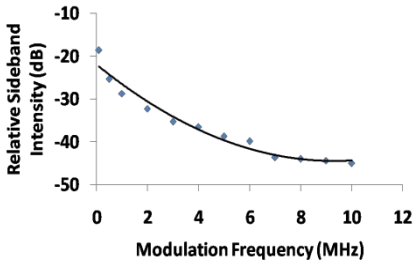

Fig. 4 The influence of modulation frequency on the RSI when the modulation index was 50%.

© 2016年 応用物理学会