UV laser driven VUV laser at 10.7-eV with a repetition rate of 1-MHz

The Univ. of Tokyo [1], °Zhigang Zhao[1], Yohei Kobayashi[1]

E-mail: zhigang@issp.u-tokyo.ac.jp

High harmonics generation (HHG) based Vacuum ultraviolet (VUV) lasers are important light source for angle resolved photoelectron spectroscopy (ARPES) experiments. Different from the traditional low repetition rate (typically <10 kHz) HHG driven by the Ti:Sa lasers, the development of high average power, high repetition rate (~MHz) femtosecond fiber lasers, slab lasers, and disk lasers are enabling the high repetition rate HHG more practicable than before.

So far, most of such kinds of high repetition rate harmonics are ranged from 20 eV to 100 eV, which is beneficial for the surface science because of the small mean free path in solid, but disadvantageous for some other science [1], like ARPES, which explore the bulk properties of the solid materials.

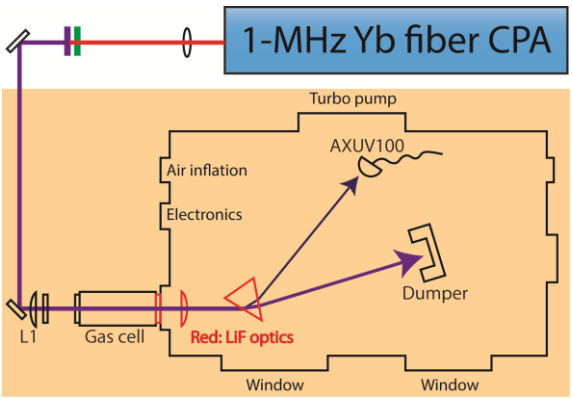

Figure-1 Experimental setup

Here, we reported a 10.7 eV laser with a repetition rate of 1 MHz, which was driven by a 347 nm ultraviolet laser. Figure 1 shows the experimental setup. The driver was a homemade 100-W Yb:fiber based femtosecond chirped pulse amplifier (FCPA) system, which had a pulse duration of 270 fs and a pulse repetition rate of 1 MHz [2]. With BBO crystals, the laser was frequency converted to 347 nm with a highest power of 20 W. A few watts of the UV laser were focused to a gas cell, which was attached to a vacuum chamber. The generated 10.7 eV laser was collimated and separated from the fundamental beam by LiF lens and prism. The power of 10.7 eV laser was measured using a XUV photodiode. When the incident power was 5 W at 347 nm, we can get more than 50 μW (shown in figure 3). If the transmissions of LiF optics (40% for each) are counted in, the generated power in the gas cell was 0.78 mW. More details will be presented in the conference.

Figure-2 Plasma picture

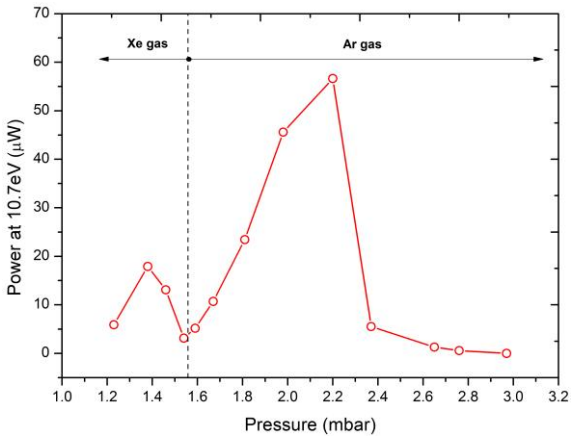

Figure-3 Power performance of the 10.7-eV laser

References:

1. Rev. Sci. Instrum. 78, 053905 (2007)
2. Appl. Phys. Express 9, 012701 (2016)