Digest of Tech. Papers *The 14th Conf. (1982 International) on Solid State Devices, Tokyo*

C—4—4 A 10X10 Polycrystalline-Silicon Thin-Film Transistor Matrix for Liquid-Crystal Display

M. Matsui, J. Owada*, Y. Shiraki, E. Maruyama, and H. Kawakami*

Central Research Laboratory, Hitachi, Ltd.
Kokubunji-shi, Tokyo 185, Japan

*Hitachi Research Laboratory, Hitachi, Ltd.
Hitachi-shi, Ibaraki-ken 319-12, Japan

Recently, much effort has been spent on applying thin-film transistors (TFT's) to addressable display panels. Polycrystalline silicon (poly-Si) films formed by a low-temperature process, such as molecular beam deposition (MBD), plasma-assisted chemical vapor deposition (CVD), and laser recrystallization, are considered promising for TFT applications. This is because of their compatibility with glass substrates and well-established photolithographic techniques, fairly high mobility, good stability, and so on[1]. This paper describes the fabrication and characteristics of a 10x10 MBD-Si-TFT switching matrix, as well as its application to an addressable liquid-crystal display panel.

Figure 1 shows one element of the fabricated TFT matrix. The TFT element has a 10 μm channel length and an 850 μm channel width. A schematic cross section of the TFT element with a liquid-crystal cell is shown in Fig. 2. Fabrication of the TFT matrix is carried out at temperatures below 600°C. After MBD poly-Si is deposited on a glass substrate, mesh-shaped poly-Si for TFT elements is formed by etching away the unwanted portion where transparent electrodes are to be formed. The fabrication processes of the TFT elements are essentially the same as those previously reported[1]: Source and drain regions are formed by P^+ ion implantation and postannealing at 600°C, and a gate insulator, 0.5 μm-thick SiO_2, is formed by CVD method at 400°C. Drain electrodes in a column interconnect with each other to form a data bus. The fabricated device is then coated with phosphosilicate glass (PSG) to form an interlevel dielectric. Each scanning bus is connected to a row of gate electrodes through contact holes, which are etched through the PSG layer. Finally, transparent conducting indium tin oxide (ITO) is deposited and etched to form the back contacts of the liquid-crystal cell, which are connected to source electrodes.

The dc performance of an elementary device is illustrated by the transfer characteristics in Fig. 3. The ON-OFF current ratio is about 1×10^4. The OFF impedance is 2×10^8 ohm, and will be able to be increased easily by a factor of 100 with a change of the geometrical design. Output characteristics of a TFT element are shown in Fig. 4. The threshold voltage is 26 V, and the field-effect mobility is about 1.4 $cm^2/V.s$.

Combining the TFT matrix with a twisted nematic liquid-crystal layer, we have fabricated a 100 picture element, 10 x 10 mm^2, transparent-mode liquid-crystal display panel. The construction of the TFT addressed liquid-crystal panel is shown in Fig. 2. A line-at-a-time addressing scheme is used. An example of alphanumeric display is shown in Fig. 5. A picture with a high contrast ratio can be obtained.

In conclusion, a poly-Si TFT matrix on glass and its application to a transparent-mode liquid-crystal display panel have been demonstrated. It has been shown that a poly-Si TFT matrix is compatible with a liquid-crystal cell from the viewpoints of both device fabrication and TFT characteristics.

Reference

1) M. Matsui, et al.: Appl. Phys. Letters 37 (1980) 936.

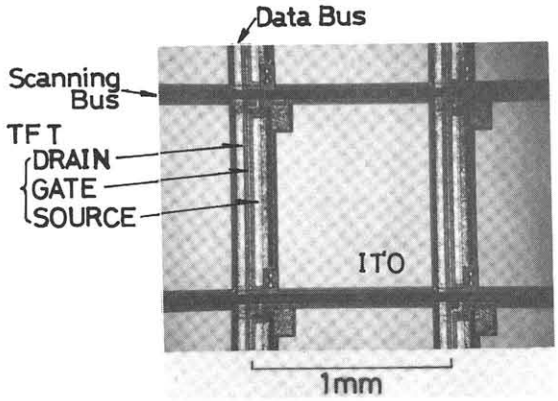

Fig. 1 One element of the TFT matrix

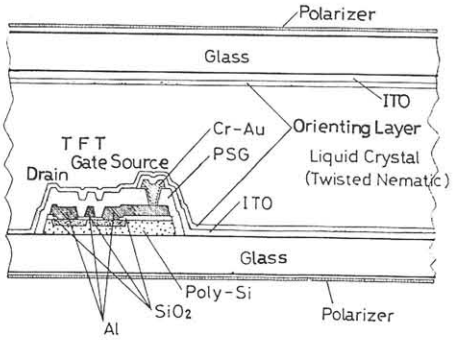

Fig.2 Cross section of the TFT addressed LC display panel

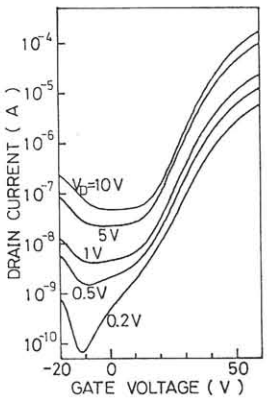

Fig.3 Transfer characteristics of a TFT element

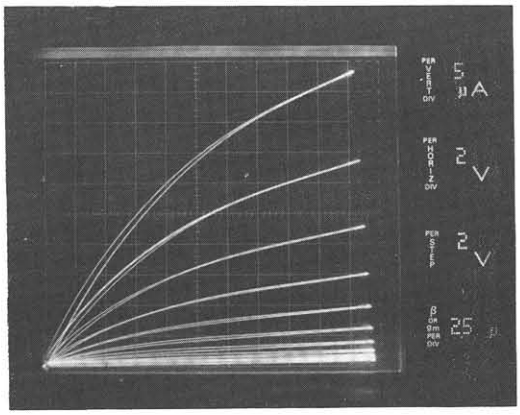

Fig.4 Output characteristics of a TFT element (V_G=20-40V)

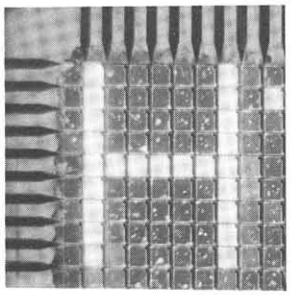

Fig.5 An example of display