Extended Abstracts of the 17th Conference on Solid State Devices and Materials, Tokyo, 1985, pp. 111-114

Anomalous Enhancement of Spectral Response of a-SiGe:H pin Solar Cell under Blue Bias Illumination

S. Terazono , K. Kawabata , M. Aiga , Y. Yukimoto

LSI R&D Laboratory, Mitsubishi Electric Corporation
4-1 Mizuhara, Itami, 664, Japan

In a-SiGe:H pin solar cells, which are intended to be used as bottom cells in tandem structure, anomalous changes in spectral response under various bias illuminations have been observed. The changes are dependent on the color of bias illuminations as well as bias voltage, and are presumably caused by a redistribution of space charge and hence a field distortion in the i-layer due to photogenerated carriers. In evaluating photovoltaic characteristics of a bottom cell in the tandem structure, one must be careful in choosing an illumination, because it may cause a deviation in field distribution from the intended operating condition.

Introduction

Recently a-SiGe:H alloys has been widely studied for a narrow band gap material for tandem structure solar cells. An improvement of a-SiGe:H pin cell, which is used for a bottom cell in the tandem structure, is the key to obtain high efficiencies.[1] The bottom cell has to have such high collection efficiencies at long wavelengths that can drive the equal photocurrent to the upper-layer cells through which the incident light comes in. For this purpose, a narrow band gap, less than 1.5 eV is desirable. Increasing Ge content in the alloy, in order to lower the Egopt , it is known that the gap states density of the film increases. Under strong illumination the population of these states may change and give rise a change in space charge distribution in the i-layer, and hence a field distribution which influences on the wavelength dependence of the collection efficiencies. And the distribution could be altered by the penetration depth of the illumination.

We have found that, in a-SiGe:H pin cells, the changes in spectral response are quite drastic and anomalous as will be shown in the following sections.

Experimental

The pin type a-SiGe:H solar cells were fabricated by glow-discharge technique,using separated reaction chambers. Each chamber was used for depositing 200 Å of p-type a-SiC:H, 4000 Å of i-type a-SiGe:H, and 400 Å of n-type a-Si:H. The p-type a-SiC:H was deposited with mixing SiH_4 , CH_4, and B_2H_6 gases diluted with H_2. The i-layer of a-SiGe:H was deposited with mixing SiH_4 and GeH_4 gases diluted with H_2, and was slightly boron doped, and n-type layer with SiH_4 and PH_3. Stainless steel substrates were used. The Egopt of i-layer is 1.45 eV. We measured spectral responses with and without bias illuminations as shown in Fig.1. The three types of bias illumination were used by interposing appropriate filters along the optical path of the bias illumination,as shown in Table 1. Also the bias voltage dependence of the spectral response under various illumination were measured.

Table 1. Types of bias illuminations

Color	Filter	Wavelength range
White	------	roughly AM 1
Red	band-pass	650 - 800 nm
Blue	band-pass	400 - 500 nm

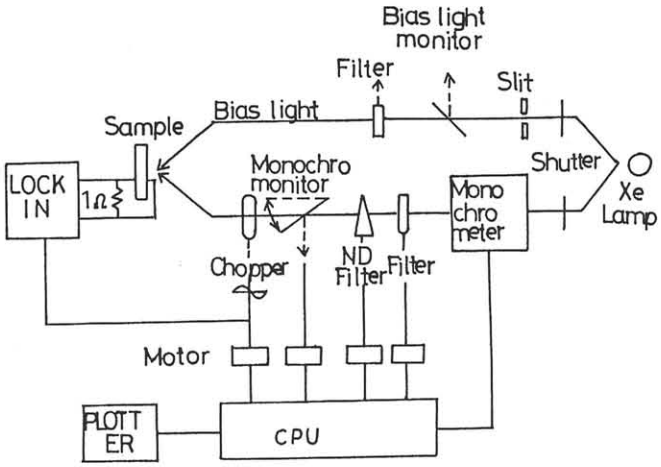

Fig.1 Experimental set-up for measuring spectral response

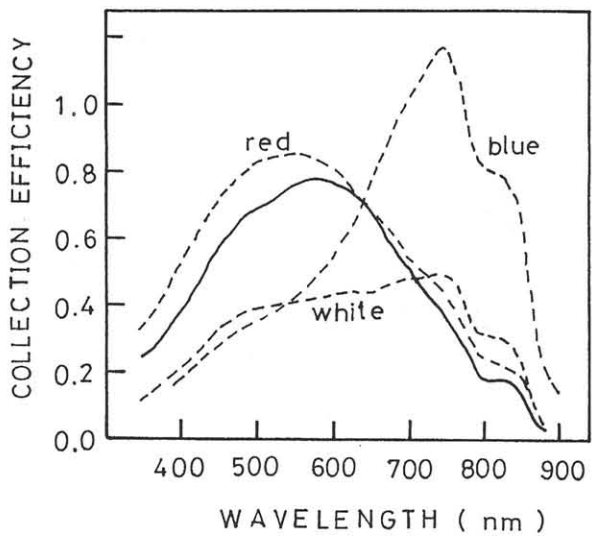

Fig.2 Collection efficiency with various bias light (dashed curves) and without bias light (solid curve).

Results

A. Dependence on wavelength of bias illumination

Spectral responses of an a-SiGe:H (Egop = 1.45 eV) pin cell are shown in Fig.2. They were measured under the three kinds of bias illuminations with zero bias voltage. These curves show drastic change with the color of bias light. With red bias light,collection efficiencies throughout the whole wavelength region (350 nm - 900 nm) are higher than those without bias light. With blue bias light, collection efficiencies for short wavelength show drastic decrease while those for long wavelengths are enhanced greatly. With white bias light, the spectral response has the features of that under the blue bias light, with suppressed peak at long wavelength. Particularly, with blue bias light, note that the collection efficiencies around 750 nm appear to be more than unity.

B. Intensity dependence

This enhancement with blue bias illumination depends on the intensity of bias light as shown in Fig.3. The relative intensity of bias light was varied from 0.05 to 1.0 with neutral density filters. The result indicates that the modulated monochromatic light around 750 nm is amplified, and the amplification factor is changed by the intensity of the blue bias light. These suggest a new concept of an optical detection with variable amplification factor.

C. Bias voltage dependence

On the other hand, this enhancement is also dependent on the D.C. bias voltage as shown in Fig.4. The voltage was changed from -1.0 V to +0.4 V. Both forward and reverse bias voltages diminish the enhancement. With high reverse bias voltage, -1 V, the responses with and without (blue) bias light become close each other. And the dependence on the wavelength of the bias light become negligible. While with forward bias voltages ,for example at +0.4 V , the spectral response with blue bias light still retains the enhancement in comparison with that without bias light in which the response over 700 nm become negative, i.e. phase reversed in lock-in detection. The negative response implies an existense of negative slope of potential profile in the i-layer.

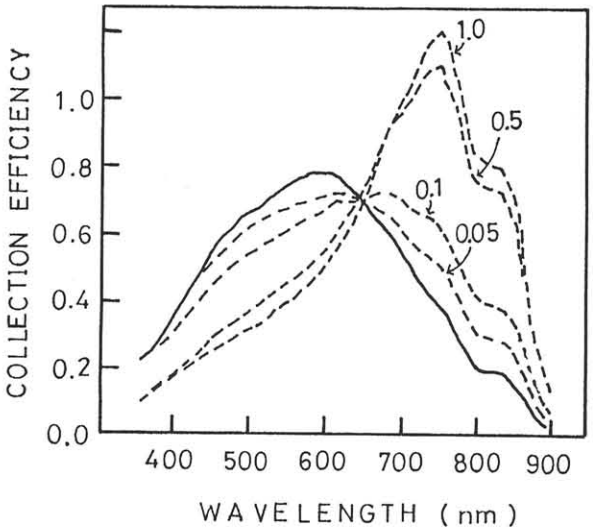

Fig.3 Collection efficiency with blue bias light for various light intensity (dashed curves) and without bias light (solid curve)

Discussions

Now let us try to explain these results. The differense at short wavelengths between the response with and without the red bias illumination, shown in Fig.2 , indicates an existense of series resistanse in a deep portion of i-layer[2], The red bias light, which can penetrate the whole thickness of the of i-layer, lowers the series resistance by a high photoconductivity of the film, thereby improves the short-wavelength response. The series resistance and the negative response in Fig.4 (b) indicate an existence of a field free portion in the i-layer in the dark. A tentative sketch of a relevant band profile is shown in Fig.5 (a). The band profile can be changed by a bias illumination in a way depending on its penetration depth. The blue illumination seems to weaken the electric field near the surface region, as sketched in Fig. 5 (b), judging from the diminished blue response under blue or white bias light. Under the red bias illumination, the field distribution through the i-layer is essentially unchanged from that in dark, because the photogeneration of carriers takes place uniformly.

The reverse bias voltage, -1 V, eliminates the effects of the bias illuminations, by increasing electric field throughout the i-layer resulting

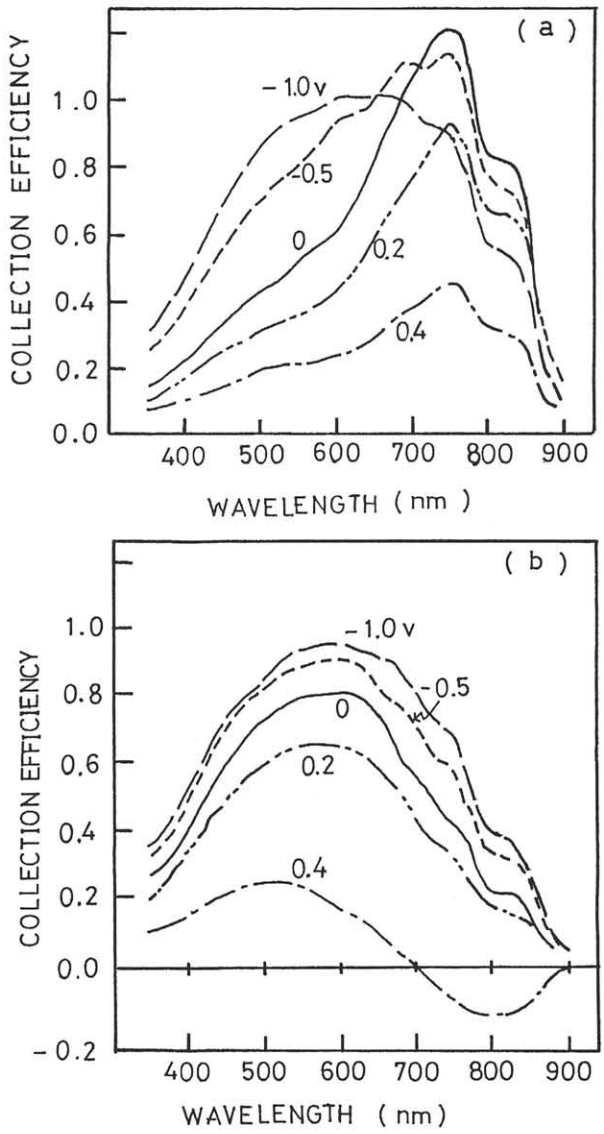

Fig.4 Collection efficiency with D.C.bias voltage

(a) with blue bias light

(b) without bias light

the spectral response not dependent on the color of the bias illumination. The forward bias voltage weakens the field through the film resulting a simple decrease of the response.

The enhancement of the response around 750 nm under blue bias light takes place as follows : The series resistance in the deep portion of the i-layer, which is left dark under the blue bias light,is modulated by a long wavelength probing light. In other words,the modulated monochromatic light plays as a switching signal of the series resistanse thereby a large photocurrent under the bias light is modulated. This modulated current is superposed on the normal response to the monochromatic light in which the bias illumination contributes only to DC photocurrent.

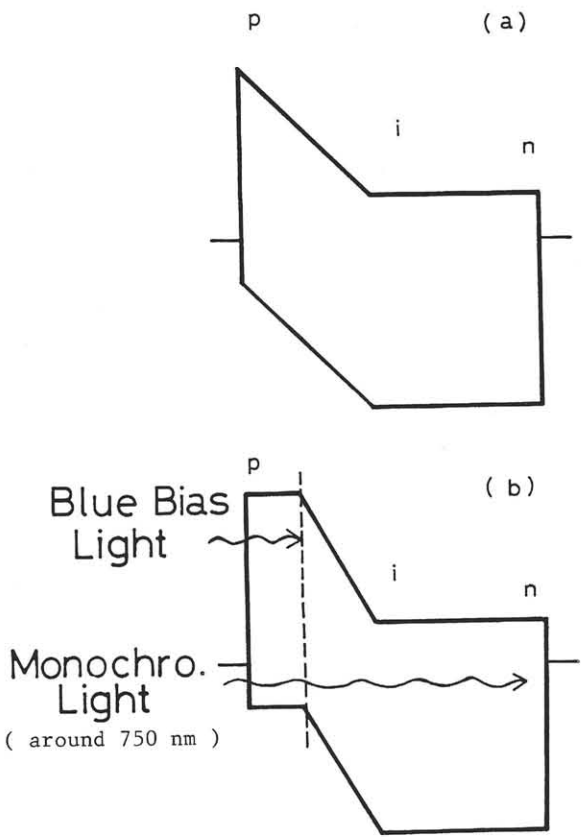

Fig.5 Schematic diagram of band profile of a-SiGe:H pin Solar cell

(a) for inital condition
; without bias light and
zoro bias voltage

(b) modulated condition with blue bias light

Note that the spectral response is influenced not only by the existence of the bias illumination but also by its wavelength.[2] It holds in the case of the measurements of photovoltaic characteristics of solar cells. Our samples, a-Si Ge:H pin cells should be measured under red light in order to evaluate the performance in tandem structure. We found that there is no parallel relation between the conversion efficiencies measured under the illumionation of AM-1 and that under red light

Therefore, a care must be taken of the choice of illuminations when an optimization of the a-SiGe:H solar cells is done.

Conclusion

It has been shown that the spectral responses of a-SiGe:H pin type solar cells are changed by the color of the bias illumination. In particular , under the blue bias light, an anomalous enhancement at long wavelength was observed. A redistribution of the space charge and hence the field distortion in the i-layer due to the bias illumination is responsible for the above mentioned change. And the enhancement is caused from the series resistance modulation by long wavelength probing light. Red illumination must be used in evaluating characteristics of a-SiGe:H pin cells, if it is intended as a bottom cell in the tandem structure. Because conversion efficiencies measured under AM-1 light have no parallel relation to that measured under red light which is real operating condition of the bottom cell in the tandem structure.

Acknowledgements

This work is supported by NEDO under the Sunshine Project of Agency of Industrial Science and Technology.

References

(1) G.Nakamura, at el, Technical digest of 1st PVSEC (1984) 587

(2) H.P.Maruska, at el, Solar Cells. 9 (1984) 37-51