C-4-1 LN

Current Mode Logic Ring Oscillators Using AlGaAs/GaAs Heterojunction Bipolar Transistors

J. Yoshida, K. Morizuka, M. Asaka, T. Kobayashi and M. Azuma

Research and Development Center, Toshiba Corporation
1 Komukai Toshibacho, Saiwaiku, Kawasaki 210, Japan

In spite of early recognition of the advantages of heterojunction bipolar transistors (HBTs) for high speed logic applications [1], it is only recently that stimulating results have been reported concerning switching characteristics [2]. This paper describes the fabrication and characterization of current mode logic (CML) ring oscillators implemented by AlGaAs/GaAs HBTs. Propagation delay time of 69 psec was obtained with power dissipation of 19 mW per gate, indicating a high potentiality of HBTs for future ultra-fast logic circuit application.

The layer structure shown in Table I was grown on semi-insulating substrate in a commercial molecular beam epitaxy machine (Varian MBE/GEN II). Fig. 1 illustrates the device structure fabricated by using conventional optical contact lithography. The fabrication process is similar to that reported previously [3]. The extrinsic base regions were formed to reduce the base resistance. Magnesium ion implantation followed by infrared lamp annealing was used for the purpose. The sheet resistance of 380 Ω was realized for the extrinsic base region whereas the sheet resistance of the intrinsic base layer was 940 Ω. The base resistance including the contact resistance of the fabricated device was evaluated to be about 160 Ω. The emitter-base and the base-collector junction areas were 4x10 μm^2 and 10x12 μm^2, respectively. Ohmic contacts to the n-type layer were provided using AuGe/Ni alloy with a typical contact resistance of 3×10^{-6} Ωcm^2. The fabricated device with 2x8 μm^2 emitter contact exhibited an emitter resistance of about 18 Ω, which was mainly due to contact resistance. AuZn was used for the base contacts and the contact resistance was estimated to be 1×10^{-6} Ωcm^2. After forming the ohmic contacts, shallow boron ion implantation was carried out to eliminate the parasitic homo p-n diode within the GaAs cap layer. This process reduces the effective emitter dimension to that of the emitter contact.

Fig.2 shows the I-V characteristic of the fabricated transistor. Owing to the relatively high doping in the emitter region ($4.5\times10^{17} cm^{-3}$), the transistor operated up to 8×10^4 A/cm^2 collector current density without reduction of the current gain. Maximum current gain of 50~60 was typically obtained. A small shift of the I_C vs V_{BE} curve to a higher voltage was found compared with the theoretically predicted ideal characteristic. This may be attributed to the diffusion of grown-in base dopant into the emitter-base bandgap grading layer. This phenomenon seems to limit the current gain.

Seven stage CML ring oscillators as shown in Fig.3 were fabricated to investigate the switching characteristics of HBTs. NiCr resistors and two-level interconnections were used to complete the circuits. Fig.4 shows an example of the output waveform observed for a ring oscillator with 100 Ω resistors. Propagation delay time down to 69 psec was observed with the power consumption of 19 mW/gate. We believe that faster switching should be possible by reducing the base series resistance and the parasitic base-collector capacitance.

References

[1] H. Kroemer ; Proc. IRE 45 (1957) 1535
[2] P. M. Asbeck et al. ; Tech. Dig. 1984 GaAs IC Symp. 133
[3] K. Morizuka et al. ; The 16th Conf. Solid State Devices and Materials, Kobe, 1984, Late News Abstract, LD-5-7

Table I Layer structure of HBTs

	Layer	Thickness (Å)	Doping (cm^{-3})	
Cap	n^+GaAs	1000	5E18	
	nGaAs	1500	4.5E17	
Emitter	$nAl_xGa_{1-x}As$	300	4.5E17	X=0-0.3
	$nAl_{0.3}Ga_{0.7}As$	2000	4.5E17	
	$nAl_xGa_{1-x}As$	300	4.5E17	X=0.3-0
Base	p^+GaAs	1000	8E18	
Collector	nGaAs	5000	1E17	
	n^+GaAs	5000	2E18	

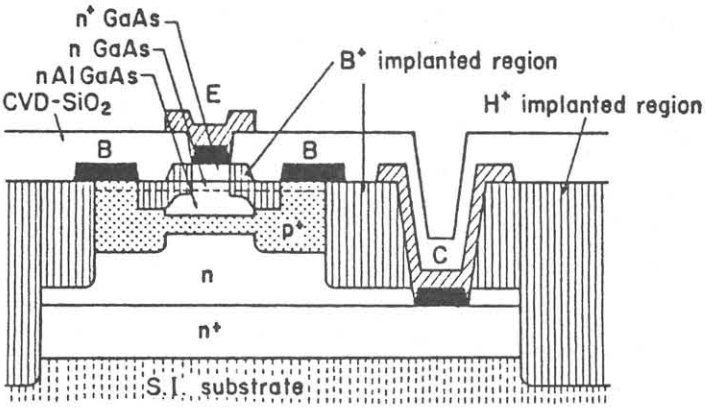

Fig.1 Schematic representation of device structure

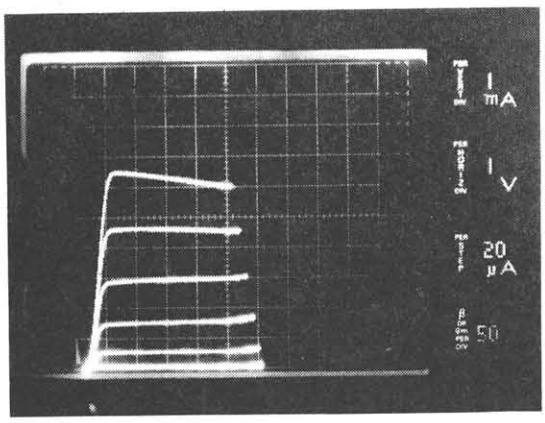

Fig.2 Common-emitter I-V characteristic for a device with 2x8 μm^2 emitter contact

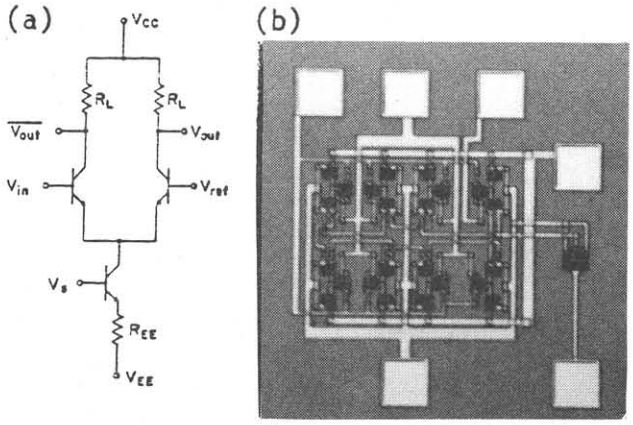

Fig.3 (a) CML gate circuit and
(b) a photograph of fabricated 7 stage ring oscillator

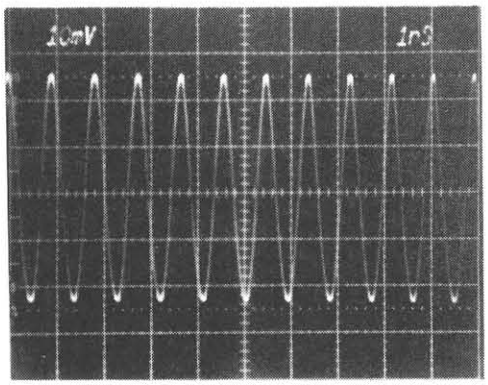

Fig.4 Output waveform of 7 stage ring oscillator