Extended Abstracts of the 21st Conference on Solid State Devices and Materials, Tokyo, 1989, pp. 221-224

Local Stress Analysis Methods Using a Micro Focused X-ray Spectrometer and Computer Simulations for ULSIs

Naoki Yamamoto and *Shinji Sakata

Central Research Laboratory, Hitachi, Ltd.
Kokubunji-shi, Tokyo 185

*Mechanical Engineering Laboratory, Hitachi Ltd.,
Tsuchiura Ibaragi 502

An energy-dispersive spectrometer with a 5.7μmΦ X-ray beam and computer simulators for stress analyses are applied for local strain analyses at micro-regions in ULSIs. Strains in aluminum interconnections caused by the differences of thermal expansion coefficients between aluminum and covering insulation layers remarkably increase in proprtion to the reciprocal line widths, when they are narrowed below about 3μm. This dependence coincides with the fact that the opening of an aluminum interconnection caused by stress-migrations has become a severe problem since VLSIs with 1~3μm layout rules were developed.

1. INTRODUCTION

Local stresses generated by complex and miniature elements in ULSIs have become one of main causes in reducing productivity of ULSIs and the reliability of their characteristics (openings of aluminum interconnections caused the stress-migration and degradations of MOS characteristics caused by the internal stresses in gate electrodes[1]). These problems are caused by local stresses or strains in the few micron meter or less region. Therefore, it is difficult to analyze the local stresses.

Recently, a few methods for analyzing local stresses, which apply X-ray diffraction[2], Raman spectroscopy[3] and computer simulation[4] have been reported. In this paper, a micro X-ray spectrometer[2] was applied for strain measurements in fine aluminum interconnections and WSi_x/poly Si gate electrodes. Furthermore, the strains and stresses in the interconnections were calculated by computer simulators.

2. STRESS AND STRAIN ANALYSIS METHODS

2.1 MICRO X-RAY SPECTROMETER

A micro X-ray beam is formed by an X-ray guide tube (XGT)[5] made of glass (Fig. 1). It has a cross section along the tube axis approximately that of a parabolic feature. The focused X-ray beam radiated from an XGT has a 5.7μm diameter and a brilliance of 10^3 times that of an incident X-ray beam into an XGT. When this micro beam irradiates on a local region, a diffraction X-ray is observed by a solid state detector. The lattice spacing(d_x) is determined by an energy-dispersive analysis method for X-ray diffraction. A strain at a micro region is equal to relative deviation $(d_x-d_o)/d_o$ from standard lattice spacing (d_o).

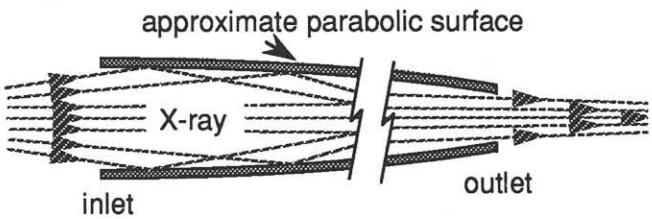

Fig. 1 X-ray Guide Tube Cross Section

2. 2 STRESS COMPUTER SIMULATION

The SIMUS (stress analysis program for multi-layer structure)[4] developed by Saito and Sakata et al., is applied. This simulator is programmed using the Finite Element Method (FEM). It can analize local stresses in complicated structures like ULSIs.

When the final LSI configurations are known, the stress state of each step in the LSI process flow is simulated from the initial stage (vergin Si substratum) to the final stage. That is, the fabrication processes are classified (1) temperature change process, (2) temperature constant process and (3) forming process of layer and patterning. These are simulated repeatedly to the final process.

3. EXPERIMENT AND RESULTS

3. 1 STRAINS IN ALUMINUM INTERCONNECTIONS

The dependence of strains in aluminum layers on the widths of Al/TiN composite interconnections is discussed. The samples are prepared from some chips in process TEGs for development of ULSIs with a half micron meter layout rule. Interconnections are formed through deposition, etching and heat treatment processes shown in Fig. 2. These interconnections are surrounded by PSG (Phospho-silicate Glass) and SiO_2. Each layer of the sample has a thickness as shown in Fig. 3.

The incident angles of X-rays can be arbitrarily selected using an energy-dispersive X-ray diffraction method. However, a low angle (10 ~ 20°) is generally applied for measuring the spaceing with high accuracy. Then, the incident length of an X-ray irradiated area on a sample is expanded longer than the diameter of the beam. In this experiment, a micro X-ray beam is irradiated from the perpendicular side to the length direction of an interconnection to protect against the expansion of the irradiation area. The lattice spacings of samples are measured in normal directions as a result of the optical arrangements of the incident X-ray and detection of diffraction X-ray shown in Fig. 3. That is, the observed strains in the sample are in the normal direction.

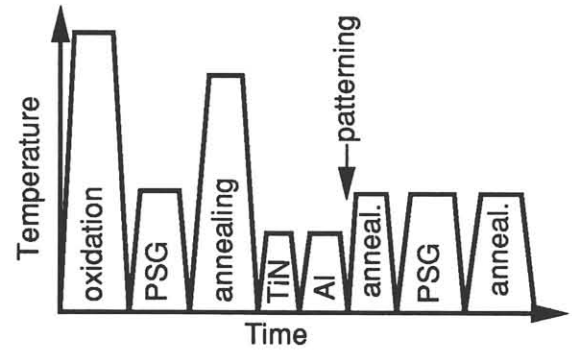

Fig. 2 Process Flow of Al/TiN Interconnection

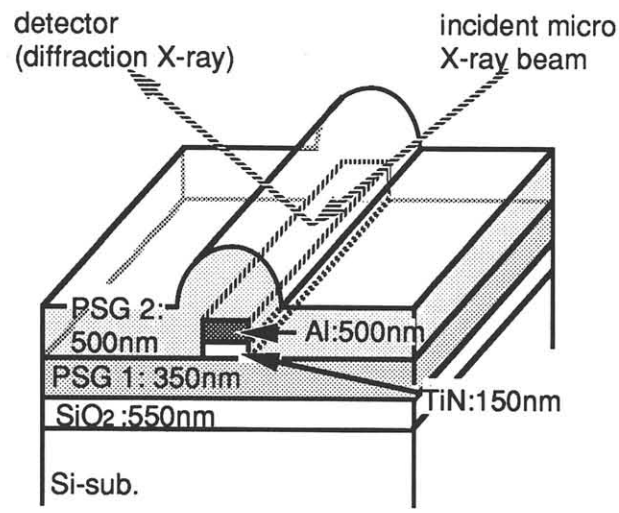

Fig. 3 Sample Structure and Arrangement of X-ray Optical System

The strains in the aluminum layers are shown as a function of the interconnection widths in Fig. 4. Each black circle (●) is a relative strain of a single line measured by the micro X-ray spectrometer. A relative strain is the deviation rate of the lattice spacing (d_x) from the standard spacing (d_o) of the aluminum 100μm^2 area with a free surface (without PSG covering layer). Then, the observed relative strains are generated by a PSG covering effect. It is found that the strains in aluminum layers in an interconnections widths of less than 2 or 3 μm

depends on W^{-1} (W: width). On the other hand, the dependence of strains has a very gently gradient in a wider width region. This phenomenon is caused by the forces that are applied to the aluminum layers from the surrounding PSG layers.

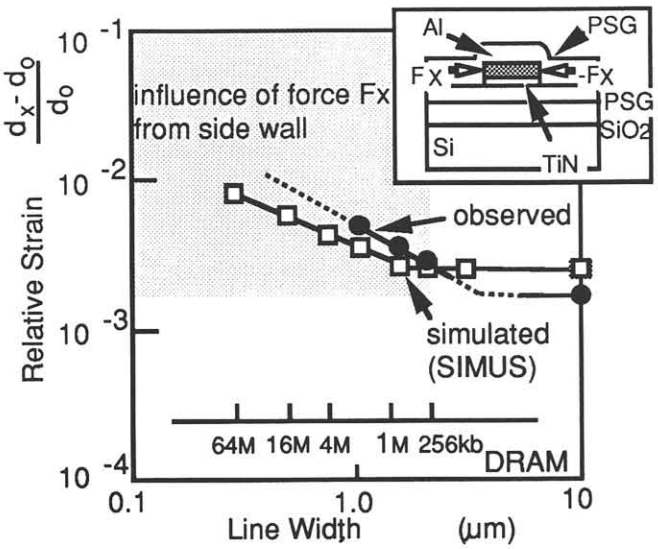

Fig. 4 Dependence of Strain in Al Layer of Al/TiN Interconnection on Line Width

The dependence of strains is simulated using the SIMUS. The same conditions as the observed samples (process conditions shown in Fig. 2 and sample structures shown in Fig. 3) were input to the simulator. The boundary conditions for the simulation are shown in Fig. 5. In the figure, A-A' condition is the Y direction free, however X direction is restricted (symmetry). The B-B' is the Y direction restricted and the X direction free. The C is the generalized plane strain condition. The simulation result is also shown in Fig. 4. It is coincident with the dependence of measured strains on the widths. It is understood from the evaluation of the effect of the simulation parameters that their dependence results from the thermal stresses generated by the large difference between thermal expansion coefficients of aluminum (23.5×10^{-6}/deg) and PSG (0.87×10^{-6}/deg).

The following analysis method was introduced from the above studies for very small and complicated regions (such as memory cells of a 64Mb DRAM). (1) First, the strains at sparse regions in ULSIs are measured using a micro X-ray spectrometer. (2) The strains are then calculated by SIMUS for the same conditions. (3) The simulation parameters are optimized to the coincide with these results. (4) The strains at target regions are evaluated by SIMUS using the best parameters.

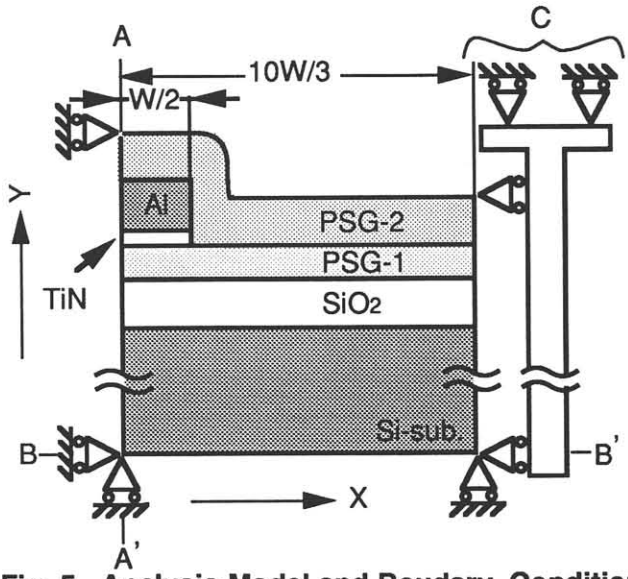

Fig. 5 Analysis Model and Boudary Conditions

3. 2 STRAINS IN WSi_x/POLY SI GATE

Strain distributions at micro regions of WSi_x/poly Si gate MOS devices measured by a micro X-ray spectrometer have already been reported by Yamamoto and Hosokawa[5]. In reference 5, it was shown that the strains in WSi_x films and Si substrata had the undulation distributions at the regions near gate electrode edges. Also, that its undulations occurrences are special phenomenon in samples with structures of WSi_x layers packed with PSG layers. However, there was an inconsistent part in the strain distribution curve in the Si substratum drawn in the paper with regards to normal physical meaning. That is, the drawn strain distributions in the Si substrata monotonously reduced with a separation from

the gate electrode edges. Then, the distribution in this region was studied using a micro X-ray spectrometer and a simulator (SIMUS) in detail in this experiment. The measured samples were the same ones used in the previous report. The process and structure conditions of the measured samples were also input for the simulations. As a result, it is shown in both the measurements and the simulations that the strain distributions in the Si substrata near the regions of the gate electrode edges have deep dents (A) as shown in Fig. 6. These distributions are reasonable from a point of view of strain neutralization in a total system.

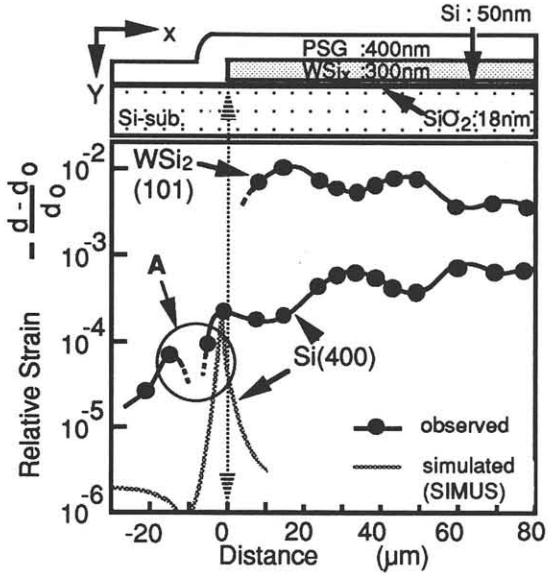

Fig. 6 Strain Distribution in WSix/poly Si Gate MOS

SUMMARY

The micro X-ray spectrometer and the stress simulator (SIMUS) are used for the strain analysis at local regions in ULSIs. The following is concluded.

(1) The strains in aluminum layers of Al/TiN composite interconnections generated by surrounding PSG layers increase rapidly when narrowing the widths of interconnections below about 3μm. This coincides with the fact that the opening of aluminum interconnections caused by stress-migrations has become a severe problem since 256kb or 1Mb DRAMs with 1~3μ layout rules were developed. The dependences of strains on the widths of interconnections coincided with both the results in the measurements and simulations. Therefore, the analysis method is proposed for stresses and strains at complicated and local regions such as memory cells of a 64Mb DRAM.

(2) The strain distributions in Si substrata of WSi_x/poly Si MOS devices were analyzed in detail using the above spectrometer and simulator. As a result, the distributions reported in the previous paper are re-drawn from a point of view of strain neutralization of a total system.

ACKNOWLEDGMENT

The authors would like to thank Mr. N. Saito and Mr. H. Miura of Mechanical Engineering Research Laboratory, Hitachi Ltd., Co. for their contributions to the simulations. The micro X-ray spectrometer used in this work was developed in co-operation between Hitachi Ltd., Co. and Horiba Ltd., Co..

REFERENCES

(1) N. Yamamoto, S. Iwata and H. Kume: IEEE Trans. Electron Devices, ED-34 (1987) 607.

(2) N. Yamamoto, Y. Takano, Y. Hosokawa and K. Yoshino: Ext. Abs. 20th Conf. Solid State Devices and Materials, Tokyo, (1988) 436.

(3) K. Kobayashi, Y. Inoue, T. Nishihara, H. Arima, M. Hirayama and T. Matsukawa: Ext. Abs. 19th Conf. Solid State Device Materials, Tokyo, (1987) 323.

(4) N. Saito, S. Sakata, T. Shimizu, S. Isomae and H. Masuda: IECE Japan, Semiconductor Device Meeting, SDM88-83 (1988).

(5) H. Nakazawa: J. Appl. Cryst., 16 (1983) 2

(6) N. Yamamoto and Y. Hosokawa: J. J. A. P., 27 (1988) L2203.