Extended Abstracts of the 1991 International Conference on Solid State Devices and Materials, Yokohama, 1991, pp. 556-558

In-situ Counting of Process-Induced Particle

Kaoru Kondo*, Kazuo Ichijo*, Keisuke Shinohara*, Tamio Hoshina*, Kazuo Tsubouchi** and Kazuya Masu**

*RION CO.,Ltd., 3-20-41 Higashimotomachi, Kokubunji 185, Japan
**Research Institute of Electrical Communication, Tohoku University
2-1-1 Katahira, Aoba-ku, Sendai 980, Japan

A flow-cell-type portable laser particle counter has been developed for in-situ counting of process-induced-particles. We measured process-induced-particles when a very small amounts of moisture and oxygen was intentionally added into SiH_4 gas. It was found that there existed a threshold concentration for particle generation caused by the reaction between SiH_4 gas and moisture/oxygen, i.e., the number of particles was not lineally proportional to the moisture and the oxygen concentrations. We also found that the size distribution of generated particles were varied due to complex mechanisms such as coagulation of small particles.

1. Introduction

The process-induced-particle contamination in production apparatus and in processing gases strongly affects the yield of products in the manufacture of VLSI. Since the conventional optical particle counters do not have leak tight structure, process-induced-particles in toxic or flammable gases cannot be measured. Furthermore, it is difficult to measure particles at high and low pressure, because the sample gas stream becomes a turbulent flow in the sensing volume and particles stray in the sensor. We developed a flow-cell-type laser particle counter.[1][2] The double O-ring seal structure was used at the seal between the quartz flow-cell and the metal flange. The helium leak rate of the particle counter was kept below 2×10^{-11} atm·cm^3/s. The minimum detectable particle diameter was 0.17μm for polystyrene latex (refractive index=1.59) particle when the sample flow rate was 10cm^3/min. We have successfully measured particles in a CVD apparatus at low pressure and in SiH_4 gases using this particle counter.[1][2]

In this paper, the particle counter was improved to be small-size and light-weight for real-time and in-line particle monitoring. We measured the number of process-induced-particles and the particle size distribution when very small amounts of moisture and oxygen were intentionally added into SiH_4 gas.

2. Experimental

Figure 1 is a photograph of the flow-cell-type laser particle counter for real-time and in-line particle monitoring. Dimensions of the particle counter was 130(H)×90(W)×170(D)mm^3 and the weight was approximately 3kg. The particle counter was able to be inserted into a gas supply line using a commercially available joint.

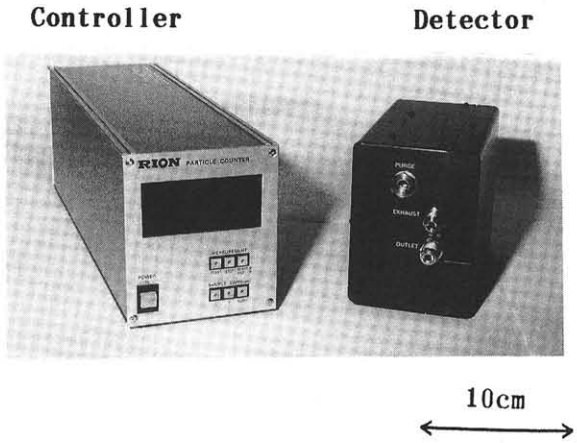

Fig.1 Flow-cell-type particle counter for in-line process-induced particle monitoring. The minimum detectable particle diameter was 0.17 μm for PSL particles at 10cm^3/min.

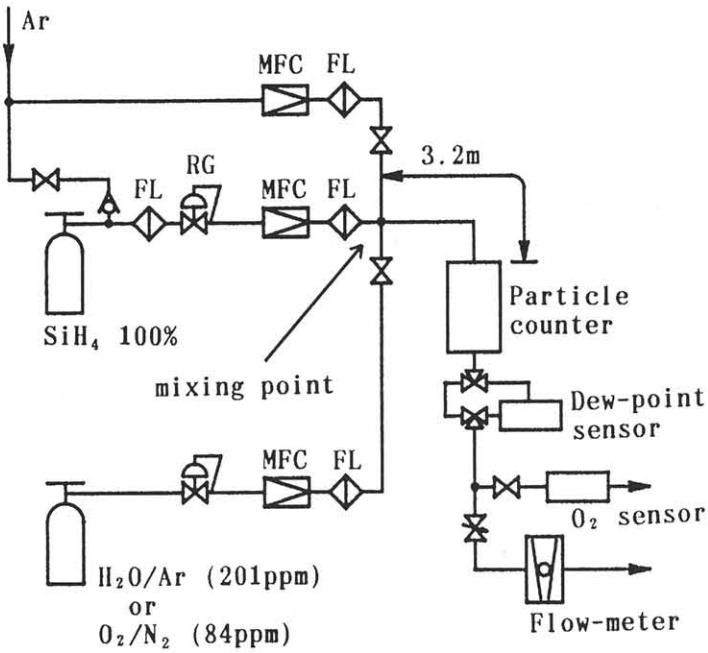

MFC:Mass-flow controller
FL :All-metal filter(0.01 μm)
RG :Pressure reducing regulator with diaphragm-type pressure gauge

Fig.2 Particle measurement in SiH_4 gas.

The experimental arrangement for measuring particles in SiH_4 gas is shown in Fig.2. Flow rate of each gas was controlled by the mass-flow controller. Each metal filter (absolute removal rating 0.01μmφ) was inserted at the upstream of the mixing point in order to eliminate particles of each gas supply line. The residual amounts of moisture and oxygen concentrations in purging Ar gas at the down stream of the particle counter were below 14ppb and below 5ppb, respectively. The 100%-SiH_4 gas was supplied from stainless steel cylinder. 10%-SiH_4 gas was obtained by diluting with purging Ar gas and introduced to the particle counter. Total flow rate introduced to the particle counter was 700sccm. No particles over 0.25μmφ were detected in the purging Ar gas and the 10%-SiH_4/Ar gas. When varying the moisture and the oxygen concentrations in 10%-SiH_4 gas, the adjusting amounts of moisture standard gas (201ppm moisture/Ar) and oxygen standard gas (84ppm oxygen/nitrogen) were added into a 3.2m-long mixture tube.

3. Results and Discussion

Figures 3 and 4 show the average particle numbers as functions of moisture and oxygen concentrations. The

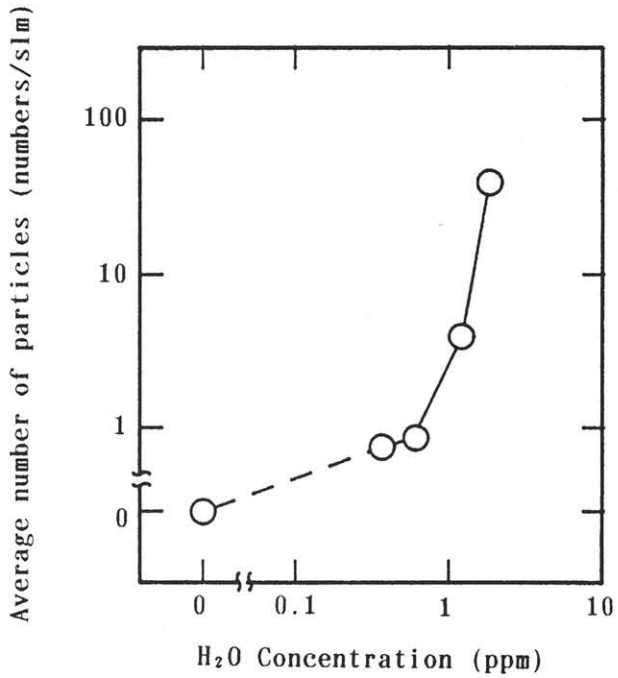

Fig.3 H_2O concentration vs. number of the induced particles larger than 0.25 μm.

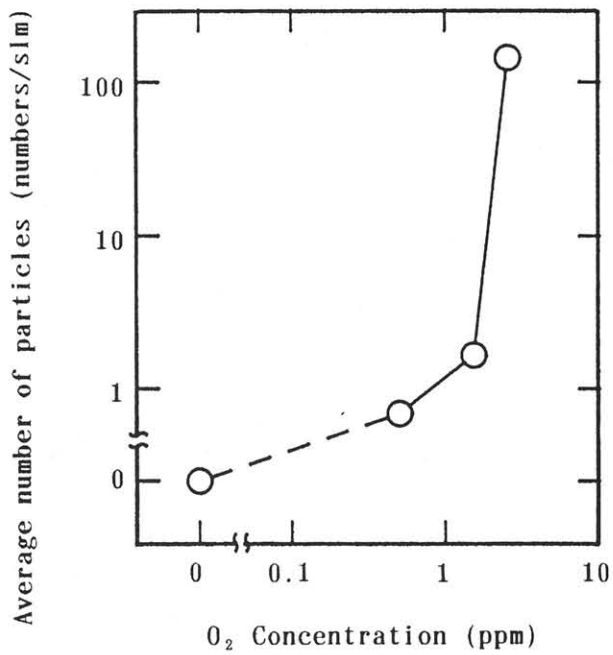

Fig.4 O_2 concentration vs. number of the induced particles larger than 0.25μm.

concentrations of moisture and oxygen were increased from 0ppm to 2.5ppm and to 1.8ppm, respectively. Measuring duration was 10 minutes at each moisture and oxygen concentration. The vertical axis was the total number of particles over

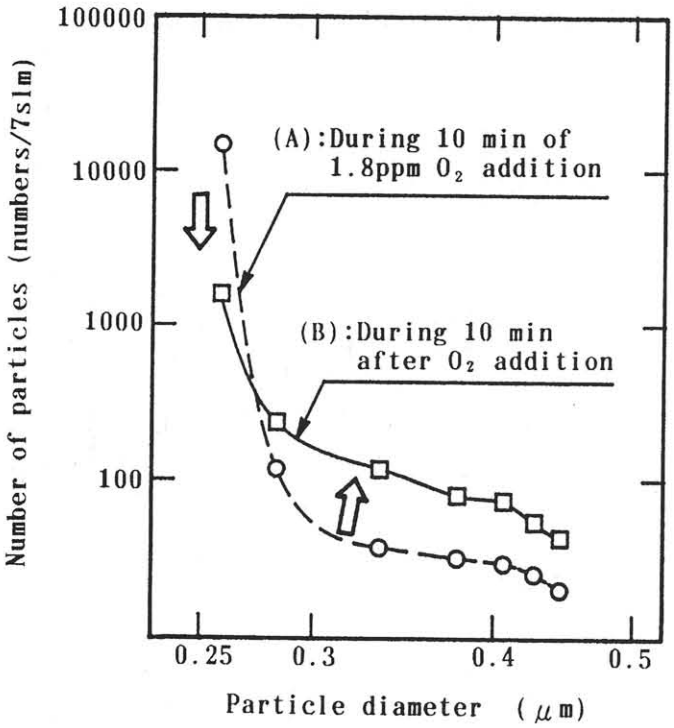

Fig.5 Size distribution of particles generated by reaction between SiH_4 gas and O_2 gas.

Particle numbers of vertical axis indicated the total numbers over the particle diameter at a point of horizontal axis.

0.25μmφ per 1slm. The number of particles increased rapidly when the moisture and the oxygen were added over 1ppm. It is noted that there exists a threshold concentration for particle generation caused by the reaction between SiH_4 gas and moisture/oxygen, i.e., the number of generated particles is not lineally proportional to the moisture and the oxygen concentrations.

Figure 5 shows size distributions of particles which were measured (A) during 10 minutes of 1.8ppm oxygen addition and (B) during 10 minutes after stopping the oxygen addition. The vertical axis indicated the total number of particles over the particle diameter at a point of horizontal axis. After stopping the oxygen addition, the total number of generated particles decreased. However, the number of particles over 0.3μmφ increased. We estimated that process-induced-particles were generated by complex mechanisms such as coagulation of very small particles and growth of particles due to the reaction with residual oxygen.

Even if the concentration of moisture or oxygen in toxic and flammable gases are able to be measured, the particle contamination cannot be evaluated because the process-induced-particles are generated by the complex mechanisms. Consequently, the continuous in-line monitoring of process-induced-particles at the inlet of a production apparatus and inside the apparatus is significantly useful in order to improve the yield of products in submicron VLSI.

4. Conclusions

We have developed the flow-cell-type laser particle counter in order to measure process-induced-particles at low and high pressure in flammable and toxic gases. Process-induced-particles have been successfully detected when a very small amounts of moisture and oxygen is intentionally added into SiH_4 gas supply line. The flow-cell-type particle counter is certainly useful for in-situ monitoring of process-induced-particles.

Acknowledgements

This work was partly done in the Superclean Room of Laboratory for Microelectronics, Research Institute of Electrical Communication, Tohoku University.

References

(1) K.Ichijo, K.Kondo, T.Hoshina, K.Tsubouchi and K.Masu: Ext. Abs. of the 22nd (1990 International) Conference on Solid State Devices and Materials (1990) p.1143.

(2) K.Ichijo, K.Kondo, T.Hoshina, K.Tsubouchi and K.Masu: Jpn. J. Appl. Phys. 29 (1990) L2405.