Extended Abstracts of the 1991 International Conference on Solid State Devices and Materials, Yokohama, 1991, pp. 450-452

Improving the Gain of the Quantum Flux Parametron

Willy Hioe, Mutsumi Hosoya, Eiichi Goto, Reiji Suda and Nobuo Miyamoto
Research Development Corporation of Japan (JRDC)
1-280 Higashi-Koigakubo, Kokubunji, Tokyo 185, Japan
Tel: (81)-423-25-7881 Fax: (81)-423-25-1783

The gain of parametron-type devices like the Quantum Flux Parametron (QFP) is affected by non-uniformity which causes an apparent input bias. A method to improve gain by circuit design is considered. A booster, a pre-activated QFP attached to the output of a clock-activated QFP, improves gain by doubling total output current without significantly increasing minimum input current. The booster's operation is analyzed theoretically and compared to results obtained from experiments on fabricated test circuits.

1. INTRODUCTION

The Quantum Flux Parametron (QFP) [1] is a Josephson device which works by the parametron principle, **Fig 1**. It has, besides the high speed intrinsic to Josephson devices, a low dissipation in the order of 1nW at 10GHz, two properties required for ultra-high speed computers.

Parametron-type devices can be built in a number of ways. The original parametron, built from ferrite cores and capacitors [2], generates either one of two possible subharmonic oscillations of opposite phases when pumped by a clock signal. Parametrons, built from a pair of Esaki diodes [3] or Josephson junctions, have a bistable potential separated by a barrier with maximum at zero output (in the ideal case) when activated. Hence, in the absence of noise, any small input can determine the polarity of the output resulting in an infinitely large gain. **Fig 2a** illustrates the parametron principle.

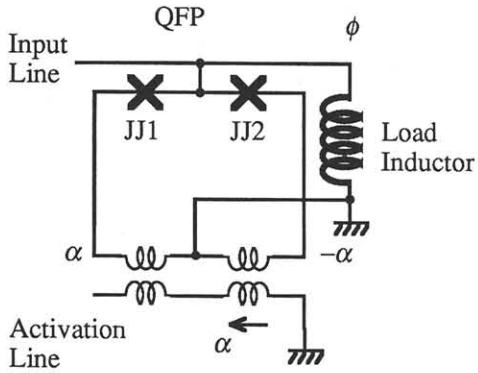

Fig 1 Scheme of basic QFP with inductive load

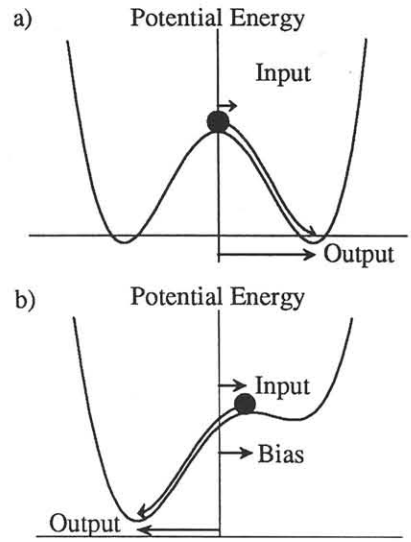

Fig 2 Potential-output curve of a) ideal QFP
b) QFP with non-uniform critical currents

In practice, gain is limited by noise and device imperfections. If the two Josephson junctions in a QFP do not have equal critical currents, an input bias is experienced, **Fig 2b**. The true input must be greater than this bias for correct operation, resulting in loss of gain.

This paper describes an auxiliary circuit, a booster, which can be attached to a clocked QFP to improve its gain. Its principle of operation is explained, followed by the results of experiments.

2. THEORETICAL ANALYSIS

The quasi-static behavior of a QFP can be analyzed from the circuit's Hamiltonian, given below normalized with respect to the QFP's characteristic energy, $\Phi_0 I_J/\pi$,

$$u = -\cos\alpha\cos\phi \pm \delta\sin\alpha\sin\phi + \frac{b}{2}(\phi - \beta)^2 \qquad (1)$$

where Φ_0 is the flux quantum, I_J is the average Josephson junction critical current, α, ϕ and β are respectively the QFP activation flux angle, output flux angle and input flux angle, δ is the fractional variation of the QFP's Josephson junction critical currents and b is the load factor defined by $\Phi_0/4\pi I_J L$ such that L is the load inductance. Flux angle ϕ is defined by $\phi \equiv (2\pi/\Phi_0)\,\Phi$, where Φ is magnetic flux.

The QFP is fully activated when $\cos\alpha = -1$. Due to noise, the QFP's state cannot remain at zero output but must be in a potential well. Because a large input will be needed to change the state of an active QFP, the input is applied when the QFP is quenched, that is, when $\cos\alpha = 1$ and the potential has a single minimum at zero output. The QFP is then activated and input is removed near full activation. Thus, in normal operation a QFP is alternatively activated and quenched by a clock signal.

The inequality of critical currents introduces the second term in (1) which has the effect of a variable input bias when $\sin\alpha \neq 0$. For correct QFP operation the output state must be on the correct side of the potential barrier when it first appears. In the limit, this is given by the condition

$$\partial^3 u/\partial\phi^3 = \partial^2 u/\partial\phi^2 = \partial u/\partial\phi = 0 \qquad (2)$$

By eliminating ϕ and α, a relation between β, δ and b is found.

$$(b\sin\beta)^2/\delta^2 + (b\cos\beta)^2 = 1 \qquad (3)$$

An alternative analysis can be found in [4].

When a booster, which is a pre-activated QFP, is attached to the output of a clock-activated QFP, **Fig 3**, the Hamiltonian becomes

$$u = -\cos\alpha\cos\phi \pm \delta\sin\alpha\sin\phi + b(\phi - \beta)^2 - \cos\alpha_B\cos\phi \pm \delta_B\sin\alpha_B\sin\phi \qquad (4)$$

α_B is the booster's activation flux angle and δ_B is the fractional variation of the booster's Josephson junction critical currents. A booster is fully activated when $\cos\alpha_B = -1$. Under this condition, the term with δ_B disappears. Hence, only the critical current imbalance of the QFP has an effect on correct operation. The output current, however, is doubled, assuming that the load is suitably adjusted for maximum output. Hence, gain is doubled.

Actually, the minimum input will not be the same, in general, with and without a booster. The improvement in gain can be accurately obtained in the follow manner. The condition for correct operation is again given by (2). A relation similar to (3) can be obtained for a QFP with

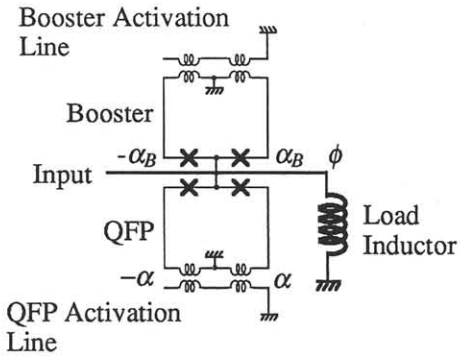

Fig 3 Scheme of QFP with Booster

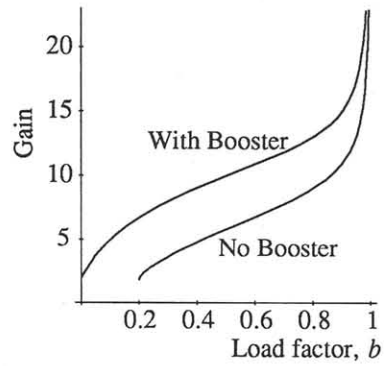

Fig 4 Gain of QFP, with and without booster, with respect to load factor

booster, assuming full booster activation,

$$(2b\sin\beta - \delta_B\sin\alpha_B)^2/\delta^2 + (-\cos\alpha_B - 2b\cos\beta)^2 = 1 \qquad (5)$$

The maximum gains for the same δ and b are compared, assuming the booster is fully activated. For example, for the case when δ=0.2 and b=2/π, the improvement in gain is about 1.6 times. **Fig 4** plots the gains for various load factors.

3. RESULTS

The photograph of a fabricated circuit to verify the booster's operation is shown in **Fig 5**. The QFP and booster had exactly the same design, so either could be the booster. They were placed symmetrically about the input-output line to reduce other possible biases such as those arising from stray coupling. Unequal junction sizes were artificially designed to obtain large δ and δ_B so that the bias due to unequal critical currents approximated an experimentally controlled parameter and was much larger than any residual biases. Output flux was observed by a dc-SQUID.

Input bias was found by a cancellation method. The condition when effective input was zero could be readily observed because the output had equal probability to have either polarity. With our instruments, the precision in detecting the zero condition was about 0.1μA.

The same test circuit was used to measure the input biases with and without a booster. For the case without a

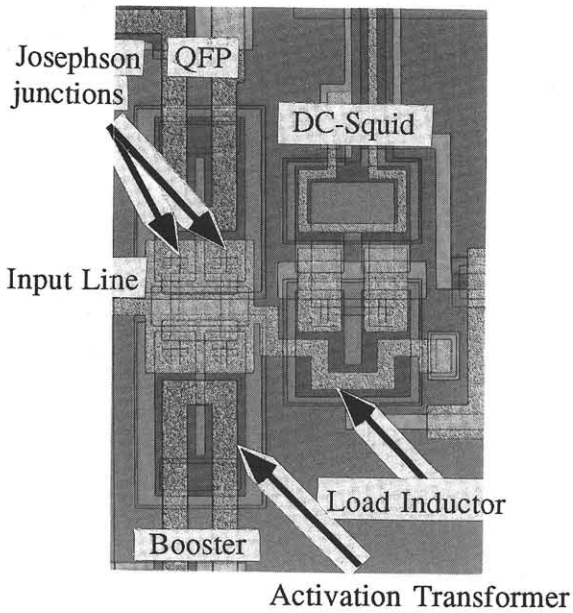

Fig 5 Photograph of test chip

booster, both QFPs were activated by clock signals with the same amplitudes and frequencies. Since the input biases depended on sin α, or the polarity of the activation signal, then depending on whether the phases differed by 0° or 180° the QFPs' input biases either added or cancelled. For the case of a QFP with booster, one of the QFP's was activated by a dc current.

The designed parameters are tabulated in **Table 1** below. The minimum input for a single QFP was measured to be 8.3μA, while that for a QFP with booster was, at optimum booster activation, 8.9μA. The average critical current variation was calculated using (3) to be 0.14. The variation of the input bias to the booster's activation level was observed and plotted in **Fig 6** with the results from quasi-static analysis.

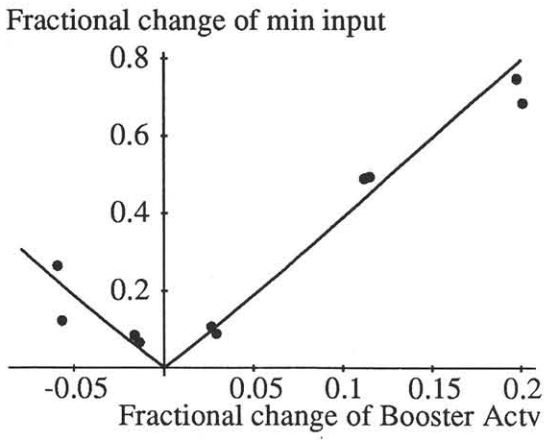

Fig 6 Variation of minimum input with respect to variation of booster activation level; dots -> expt data, solid line -> quasi-static analysis

Table 1 Parameters of Test Chip

I_J	27μA (±3.4%)
b	0.26
δ	0.14 (designed value = 0.2)

4. DISCUSSION

In general, the maximum gain of the QFP may be written as

$$\text{gain} = \frac{(1+\text{m})\, I_Q}{I_{imbalance} + I_{coupling} + I_{noise} + margin}$$

$I_{imbalance}$ is the bias current due to imbalance between the two arms in the QFP, including variation in critical currents and other geometric variations. $I_{coupling}$ is the bias due to stray coupling, mainly from clock lines, and interaction between QFPs because they are two-terminal devices. I_{noise} is the maximum equivalent current due to noise. m is 1 or 0 depending on whether a booster is used. This paper only considered $I_{imbalance}$ which is the main factor affecting gain for our circuits. If δ=20%, the gain at maximum output (b=2/π) cannot be better than 7 for a single QFP.

The effectiveness of the booster is fairly sensitive to the level of activation. From **Fig 6**, a 10% variation in activation current results in almost 38.5% increase in minimum input in the worst case. Variations in booster activation flux are mainly due to activation current and mutual inductance variations. If dc activation current is used, control will be less difficult. Inductance variations which are mainly due to geometric variations will increase with small physical dimensions. A regulator which ensures full activation over a wide range of applied flux will be important for reducing this sensitivity.

The analysis has centered about the QFP. However, it will not be difficult to extend the results to other parametron devices.

ACKNOWLEDGEMENTS

This research was done under the ERATO program of JRDC. Test chips were fabricated by the Hitachi Central Research Laboratory.

REFERENCES

1) E. Goto & K.F. Loe, DC Flux Parametron: World Scientific, Singapore (1986).
2) E. Goto, Proc of IRE (1959) 1304.
3) E. Goto, et al, IRE Trans. Electronic Computers (1960) 25.
4) N. Shimizu, et al, IEEE Trans. Elect. Dev. ED-36, 6 (1989) 1175.