Extended Abstracts of the 1992 International Conference on Solid State Devices and Materials, Tsukuba, 1992, pp. 563-565



# Amorphous Visible-Light Thin Film LED Having a-SiN:H As a Luminescent Layer

Dusit Kruangam, Wirote Boonkosum, Pavan Siamchai and Somsak Panyakeow

Semiconductor Device Research Laboratory,
Department of Electrical Engineering, Faculty of Engineering,
Chulalongkorn University, Bangkok 10330, Thailand.

Hydrogenated amorphous silicon nitride (a-SiN:H) has been first applied as a luminescent active layer (i-layer) in amorphous visible-Light Thin Film Light Emitting Diode (TFLED). The TFLED has a structure of glass substrate/ITO/p a-SiC:H/i a-SiN:H/n a-SiC:H/Al. The red color emission can be observed at room temperature from the TFLED of which the optical energy gap of i a-SiN:H layer is around 2.41 eV.

## 1. Introduction

Hydrogenated amorphous silicon nitride (a-SiN:H) ternary alloy has been widely studied by many research groups from the view points of both basic properties and possibilities of applications to electronic devices (1-2). The main applications of a-SiN:H so far have based on its insulating properties such as passivation layers on electronic devices and gate layers in Thin Film Transistors (TFT) (3). As for the semiconducting properties, there are some reports on the optical properties of a-SiN:H (4). They reports that if the optical energy gap of a-SiN:H is wide enough for example $E_g$ = 2.2-3.5 eV, the photoluminescence of a-SiN:H will show visible light. However, there has been no report on the application of a-SiN:H as a luminescent active layer in any light emitting device so far.

In this paper, the success in the application of semiconducting a-SiN:H as a luminescent active layer in a Thin Film Light Emitting Diode (TFLED) is prepented for the first time. In the past few years, the authors have succeeded in the development of amorphous visible-light Thin Film Light Emitting Diode (TFLED) based on a-SiC:H (5-7). The TFLED had the structure of glass substrate/ITO/p a-SiC:H/i a-SiC:H/n a-SiC:H/Al.

The purpose of this work is to examine the possibility of applying a-SiN:H as a luminescent layer in the TFLED. The structure of the TFLED employed in this work is glass substrate/ITO/p a-SiC:H/i a-SiN:H/n a-SiC:H/Al.

In this paper, fabrication technologies and basic properties of a-SiN:H TFLED are presented.

## 2. Preparation of TFLED

The TFLED employed in this work has a structure of glass substrate/ITO/p a-SiC:H/i a-SiN:H/n a-SiC:H/Al as shown in Figure 1. The thicknesses of the p-, i- and n-layers are 150 Å, 500 Å amd 300 Å, respectively. The amorphous layers were prepared by a capacitively coupled RF (13.56 MHz) glow discharge plasma CVD system. The substrate temperature and gas pressure during film growing were 190 °C and 1.0 Torr, respectively. The source gases for a-SiN:H layer were a mixture of silane and Ammonia. The source gases for a-SiC:H layers were a mixture of silane and Methane.

In the TFLED, the p- and n- a-SiC:H layers act as injectors of holes and electrons, respectively, into the a-SiN:H luminescent active i- layer. The optical energy gaps of the p- and n- layers were kept

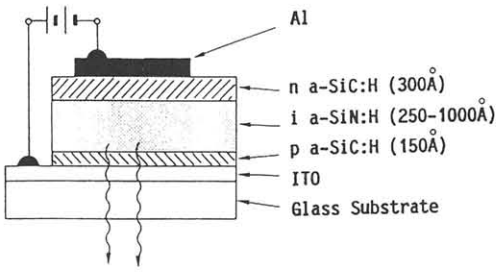


*Fig.1 Structure of a-SiN:H TFLED*

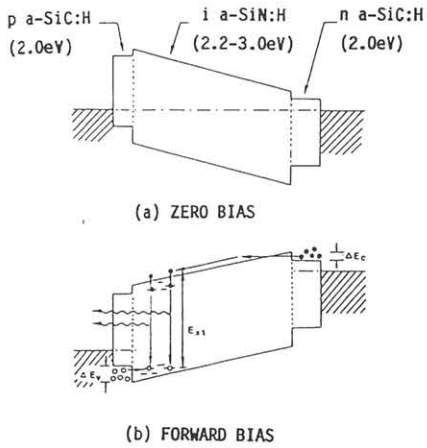


*Fig.2 Band diagrams of a-SiN:H TFLED*

constant at 2.0 eV to ensure the dark conductivities of the order of $10^{-7}$ ($S.cm^{-1}$).

## 3. Results and Discussions

### 3.1 Diode Characteristics of a-SiN:H TFLED

Figure 2 shows a schematic band diagram of p a-SiC:H/i a-SiN:H/n a-SiC:H heterojunction TFLED in (a) thermal equilibrium and (b) forward bias conditions, respectively. The injection electroluminescence can be observed when the diode is positively biased. The results from the photoluminescence show that in order to obtain a visible luminescence, the optical energy gap of the i-layer has to be larger than 2.2 eV. While the optical energy gap of the p- and n- layer should be at most around 2.0 eV. Thus, there exists the band discontinuities (notch barriers) at the p/i ($\Delta E_v$) and i/n ($\Delta E_c$) interfaces.

In order to show that the p-a-SiC:H/i a-SiN:H/n a-SiC:H junction exhibits a diode characteristic the electrical characteristics have been examined. Figure 3 shows the semilogarithmic curves of current density (J) versus applied voltages (V) measured at room temperature for the TFLED of which the

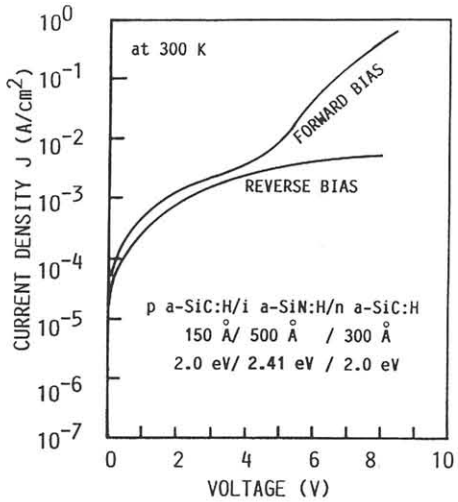


*Fig.3 J-V curve of a-SiN:H TFLED*

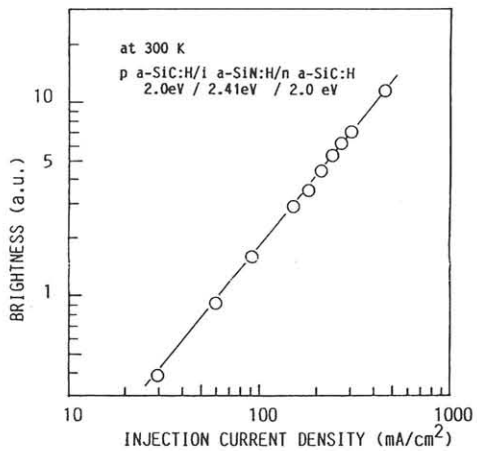


*Fig.4 Variation of the brightness with the injection current density for a-SiN:H TFLED*

optical energy gap of i a-SiN:H layer is 2.41 eV. The rectification ratio of forward to backward current at 8V (the voltage where the emission begins to be observed) is more than two orders of magnitudes. The emission can be observed when the current density is higher than $10^{-3}$ ($A/cm^2$).

### 3.2 Electroluminescence Properties of a-SiN:H TFLED

The emission from TFLED can be observed under a forward bias condition. Under a forward bias condition, elctrons and holes are injected from the n-layer and p-layer respectively, into the luminescent a-SiN:H layer via the field tunneling process

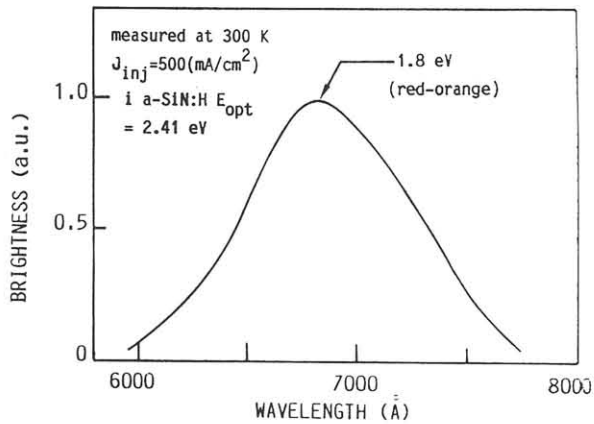


*Fig.5 Emission spectrum of a-SiN:H TFLED. The optical energy gap of the i a-SiN:H layer is 2.41 eV.*

through the notch barriers at the i/n and p/i interfaces. The injected electrons and holes are then recombined through the localized states in the luminescent a-SiN:H layer.

Figure 4 shows the room temperature variation of the brightness with the injection current density for the red TFLED. It is found in this Figure that the brightness (B) varies with the injection current density as B & $J^n$, where the exponent n is close to unity.

### 3.3 Emission Spectrum of a-SiN:H TFLED

Figure 5 shows a room temperature emission spectrum of a-SiN:H TFLED of which the optical energy gap of a-SiN:H layer is 2.41 eV. The spectrum peaks around 1.8 eV and is quitely broad with FWHM = 0.2 eV. The color of the TFLED is red.

### 3.4 Example of Real Emission from a-SiN:H TFLED

Figure 6 shows an example of a real emission from the red color TFLED. The diameter of the emission pattern is 2 mm. The emission was observed at $V_F$ = 8V and $J_{inj}$ = 8 mA. The emission can be observed in a dark room and the brightness is at the order of 0.1 cd/m$^2$.

## 4. Conclusion

A new effort has been made to develope a Thin Film LED from a-SiN:H based material. The success in the fabrication of a-SiN:H based TFLED should expand the applications of a-SiN:H material.

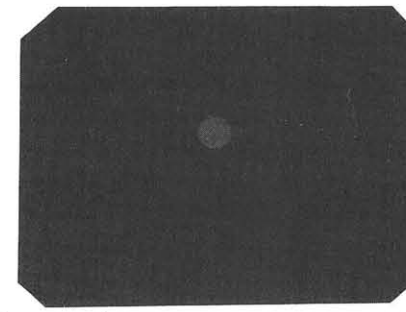

*Fig.6 Example of the real emission from a-SiN:H TFLED. The diameter of the emission pattern is 2mm.*

The amorphous-visible TFLED has various attractive advantages. It is available for a low cost and wide-area flat-panel display. It can be operated with much lower voltages as compared with an intrinsic EL devices. One can realize a multi-color TFLED only by adjusting the optical gaps of the luminescent i-layer. Furthermore, because of the amorphous nature, the TFLED can be formed on any substrates, e.g., glass, polymer film, ceramic or stainless steel, etc.

**Acknowledgements**

This work was supported by the Research Division of Chulalongkorn University, Ministry of University Affairs, Thailand.

**Reference**

1. M. Hirose : Japan Annual Reviews in Electronics, Computers & Telecommunications Vol. 6. Amorphous Semiconductor Technologies & Devices, Y. Hamakawa ed, (1983) 173.
2. D.A. Anderson and W. E. Spear : Philos Mag., 35 (1979) 1.
3. P.G. LeComber, W.E. Spear and A. Ghaith : Electron. Lett. 15(6) (1979) 179.
4. H. Kurata, M. Hirose and Y. Osaka : Jpn. J. Appl. Phys. 20 (1981) L811.
5. D. Kruangam, T. Endo, M. Deguchi, H. Okamoto and Y. Hamakawa : Optoelectronics Devices and Technologies, 1 (1), (1986) 67.
6. D. Kruangam, M. Deguchi, T. Endo, W.G.Pu, H. Okamoto and Y. Hamakawa. Proc. of 18th International Conference on Solid State Devices and Materiols, Tokyo, (1986) 683.
7. D. Kruangam, M. Deguchi, T. Toyama, H. Okamoto and Y. Hamakawa : IEEE Trans on Electron Devices, 35 (7), (1988) 957.