Extended Abstracts of the 1992 International Conference on Solid State Devices and Materials, Tsukuba, 1992, pp. 257-259

Deep Level Characterization of Submillimeter-Wave GaAs Schottky Diodes Produced by a Novel In-Situ Electrochemical Process

Tamotsu HASHIZUME, Hideki HASEGAWA*, Takayuki SAWADA*,
Andreas GRÜB**, and Hans L. HARTNAGEL**
Hokkaido Polytechnic College, Zenibako 3-190, Otaru 047-02, JAPAN
Telefax:0134-62-2154 Telephone:0134-62-3553
*Research Center for Interface Quantum Electronics,
Hokkaido University, Sapporo 060, JAPAN
**Institut für Hochfrequentztechnik,
Technische Hochshule Darmstadt, W-6100 Darmstadt, Germany

Various preparation methods used for fabrication of submillimeter-wave Pt/GaAs Schottky diodes are compared with respect to deep levels present in the diode surface region. In the samples prepared by the standard E-beam evaporation process, three process-induced deep levels were detected with the concentrations in the range of 10^{13}-10^{14} cm^{-3}. On the other hand, these levels were very much reduced in the diodes produced by a new in-situ electrochemical technique. This appears to be related to the reported very low noise property of the latter diodes.

1. Introduction

Achievement of a low noise temperature is a key issue in small area, low capacitance Schottky diodes for submillimeter-wave applications. In addition to the intrinsic shot noise, these diodes exhibit current-dependent excess noise.[1] Its origin has not been amply clarified yet, although an electronic process involving deep levels is suggested. Empirically, the excess noise magnitude depends strongly on the diode fabrication technology. Recently, it has been reported that GaAs Schottky diodes produced by a new in-situ electrochemical process[2] show a excellent low-noise property.[3]

The purpose of the present paper is to characterize the deep levels present in the surface region of the Pt/GaAs Schottky diodes produced by this new in-situ electrochemical technique in comparison to those by standard E-beam evaporation techniques.

2. Experimental

Preparation methods of the Pt/GaAs Schottky diodes used in the present study are summarized in Table 1. For a meaningful comparison, all the samples were produced on the same MBE layer ($n=2x10^{16}cm^{-3}$). The type #4 samples were produced by a new in-situ electrochemical process[2] where the epi-layer was etched in a controlled fashion by the anodic pulse etching followed by electrochemical in-situ deposition of Pt. Figure 1 shows the experimental set-up for the electrochemical process together with the waveform of the applied etch pulses which supply holes by instantaneous avalanche. The etch depth could be precisely controlled at a rate of 4 nm/pulse. SEM observation revealed extremely a smooth etched surface.

Table 1. Sample preparation methods.

	surface treatment	metal deposition method
#1	rinse in deionized water	E-beam
#2	wet etching ($HCl:H_2O$)	E-beam
#3	wet etching ($NH_4OH:H_2O_2:H_2O$)	E-beam
#4	anodic pulse etching	cathodic deposition

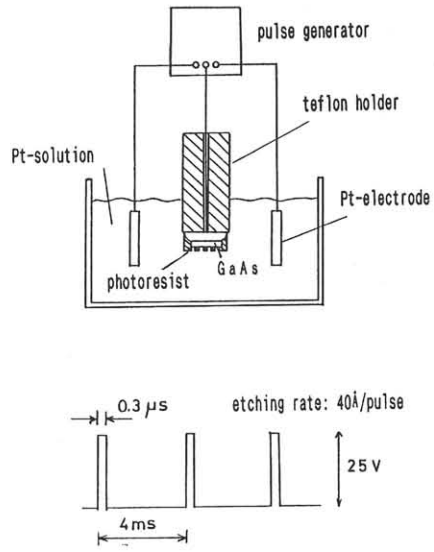

Fig.1.
Experimental set-up for the electrochemical process and the voltage pulse waveform.

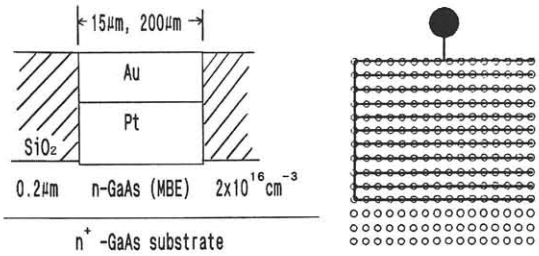

Fig.2.
Sample cross-section and the layout of a sample having parallel-connected small area diodes.

Deep levels were detected by a standard DLTS system with a 1-MHz capacitance meter (Boonton 72B) and a boxcar integrator (NF BX-531). In order to enhance the detection sensitivity of deep levels in small area diodes with extremely small capacitance, test structures schematically shown in Fig.2, having many small-area (15 μm^{Φ}) diodes connected in parallel, were specially prepared in addition to large area diodes (200 μm^{Φ}).

3. Results and Discussion

Typical DLTS spectra obtained for the Pt/GaAs diodes are shown in Fig.3. The probing depth of the levels was about 500Å from the GaAs surface. Deep electron traps S1-S3 were detected in samples #1-#3. The concentration of these levels was in the range of 10^{13} to 10^{14} cm^{-3}, and was very different from sample to sample in spite of the fact that they were formed on the same epi-layer. General behavior was much the same for the large area diodes and the parallel-connected small area diodes.

The "signature plots" of these levels are shown in Fig.4. S1, S2 and S3 levels posses activation energies of 0.08, 0.27 and 0.55 eV, respectively. Reported data on the native defect levels in MBE GaAs (M0-M4)[4,5] and the irradiation-induced defect levels (E2-E5)[6,7] are also indicated in Fig.4. These plots clearly indicate that the present levels, S1-S3, are not due to formation of native defects but due to process-induced defects, being most likely associated with damages due to electron beam irradiation.

The concentration profiles of the levels for the #1 samples, obtained by varying the bias voltage in the DLTS method, are shown in Fig.5. As can be seen, all of the levels are present only in the vicinity of the surface, within about 1000 Å. This again indicates strongly that the S1-S3 levels are process-induced defects. On the other hand, only S3 level was detected in samples #4. This is consistent with the inherently gentle nature of the electrochemical process which prevents material damage during device processing.

The emission time constant of the S1 level at room temperature was estimated to be 10^{-8}-10^{-10}s from the "signature plot" of the

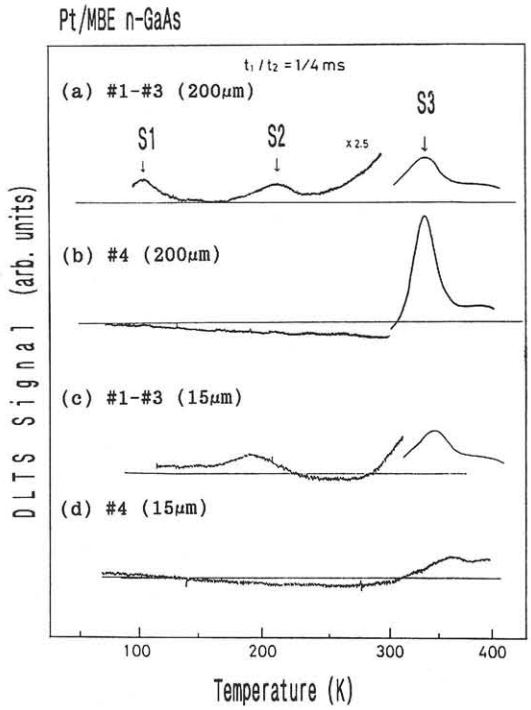

Fig.3.
Examples of observed DLTS spectra.

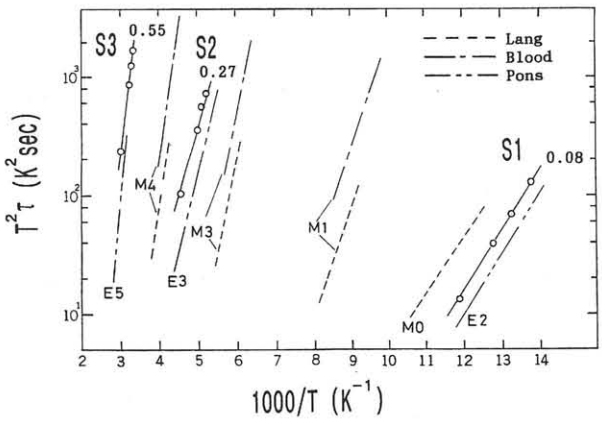

Fig.4.
"Signature plots" of observed deep levels (S1-S3), reported native defect levels (M0,M1,M3,M4) in MBE GaAs and reported irradiation-induced levels (E2,E3,E5) in GaAs.

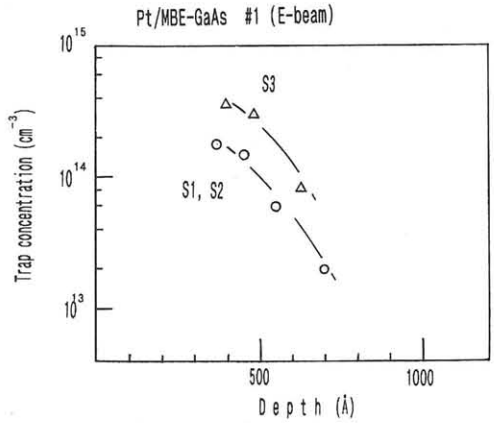

Fig.5.
Concentration profiles of the observed deep levels.

level. This value is very close to that obtained analyzing the frequency dependence of the excess noise temperature for the Pt/GaAs diodes.[1] Therefore, the recently reported low noise performance[3] of the diodes produced by the present process appears to be due to absence of such levels.

For the parallel-connected small area diodes by the present electrochemical process, the S3 level is reduced in concentration by a factor of 5-10, as compared with those in large area samples. The conditions of the anodic pulse etching technique were optimized for small area (1-5 μm^{Φ}) Schottky diodes,[2] and this may be related to the observed reduction of the level.

To investigate the nature of the observed levels, isochronal annealing characteristics of the levels were examined. The results are shown in Fig.6 where the concentration at the depth of about 500 Å from the surface is plotted versus annealing temperature.

The S3 level indicates to be annealed out at a temperature as low as about 200 ℃. The S1 and S2 levels are also reduced by annealing, but at slightly higher temperatures (T≃400 ℃). The observed behavior is very similar to that of the E traps that are introduced either by electron-irradiation[6] or by γ-irradiation.[7] The E traps are thought to originate from simple vacancy- or interstitial-type defects from the following facts: (i) their introduction rates are temperature independent over the range between 4 and 300 K;[6] (ii) the threshold energy for their creation is the same;[8] and (iii) their annealing kinetics agrees with that of the recombination of the vacancy-interstitial pair.[9]

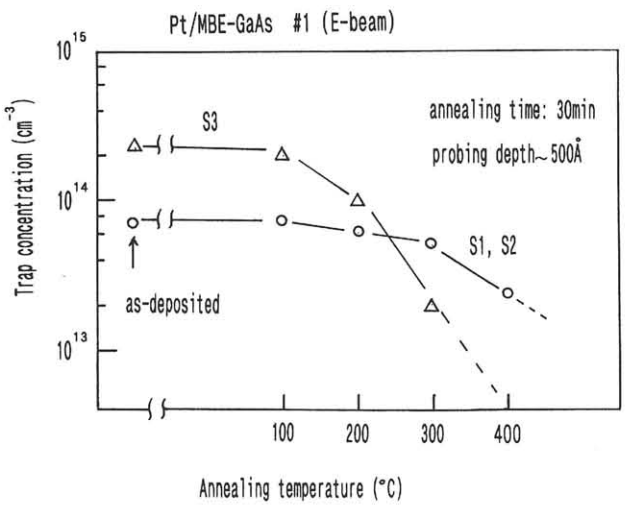

Fig.6
Isochronal annealing characteristics of the observed deep levels.

The similarity of the thermal annealing behavior to that of the E traps as well as the "signature plots" shown in Fig.4, indicate that the present process-induced levels originate from simple defects such as vacancies, interstitials and Frenkel pair. A possible reason for creation of the levels in samples #1-#3 may be the influence of X-rays produced by electron-beam evaporation of Pt.

4. Conclusions

(1) Electron-beam evaporation technique conventionally used for fabrication of Pt/GaAs submillimeter Schottky diodes produces various kinds of E-trap like process-induced deep levels in the GaAs surface region with the concentrations in the range of 10^{13}-10^{14} cm^{-3}.

(2) Process-induced levels are much reduced in the diodes by the new in-situ electrochemical technique. The recently reported low noise performance of these diodes appears to be due to absence of process-induced levels, particularly to that of S1 level.

Since generation of process-induced damages is a serious problem in nanometer-scale structures by ion, radical and electron-beam technologies, the electrochemical approach based on electrochemical potential in millivolt range may become important in future.

Acknowledgment

The authors acknowledge the support by Max-Planck-Forschungs Preis from Max-Planck-Gesellshaft and Alexander von Humboldt-Stiflung.

References

1)A.Jelenski, E.L.Kollberg, and H.H.G. Zirath: IEEE, **MTT-34**, 1193(1986).
2)A.Grüb, K.Fricke, and H.L.Hartnagel: J.Electrochem.Soc., **138**, 856(1991).
3)N.J.Keen et al.:16th Int. Conf. Infrared & mm-Waves, Lausanne (August, 1991).
4)D.V.Lang, A.Y.Cho, A.C.Gossard, M.Ilegems, and W.Wiegman:J.Appl.Phys., **47**, 2558(1976).
5)P.Blood and J.J.Harris:J.Appl.Phys., **56**, 993(1984).
6)D.Pons and J.C.Bourgoin:J.Phys.C, **18**, 3839(1985).
7)T.Hashizume and H.Hasegawa:J.Appl.Phys., **68**, 4598(1990).
8)D.Pons, P.M.Moony, and J.C.Bourgoin: J.Appl.Phys., **51**, 2038(1980).
9)D.Pons, A.Mircea, and J.C.Bourgoin: J.Appl.Phys., **51**, 4150(1980).