Extended Abstracts of the 1993 International Conference on Solid State Devices and Materials, Makuhari, 1993, pp. 1077-1079

Weighted Sum Threshold Logic Operation in Multiple-Input MOBILEs(Monostable-Bistable Transition Logic Elements)

Tomoyuki Akeyoshi, Koichi Maezawa, and Takashi Mizutani
NTT LSI Laboratories
Morinosato-Wakamiya 3-1, Atsugi 243-01, Japan
Tel: +81 462 40 2929 Fax: +81 462 40 2872

The functional operation of a MOBILE (monostable-bistable transition logic element) has been studied using multiple-input logic gates. MOBILE uses two resonant-tunneling transistors (RTTs) connected in series and driven by oscillating bias voltage to produce a mono-to-bistable transition of the circuit. A fabricated MOBILE having 3-input gates with a 1:2:4 width ratio performs weighted sum threshold logic operation for input signals. Both positive and negative weights are easily produced when input signals are applied to both RTTs.

1. Introduction

In recent years, resonant-tunneling devices[1-3] have attracted considerable attention. Such devices have high potential as functional devices due to their unique I-V characteristics. These novel devices also might reduce the complexity of conventional transistor circuits. We have recently proposed the monostable-bistable transition logic element (MOBILE)[4] as a new functional device. Significant advantages of this device are its high-speed operation, large number of fan-outs possible without sacrificing operating speed, multiple-input, and weighted sum operation capability. In this paper, we describe the weighted sum threshold logic operation of MOBILEs with multiple input terminals.

2. The Principle of MOBILE Operation

The MOBILE uses two resonant-tunneling transistors (RTTs), driver and load, connected in series and driven by oscillating bias voltage (V_{bias}), to produce a monostable-bistable transition, as shown in Fig. 1. Switching to one of the two stable points occurs exactly at the transition point, when the bias voltage exceeds twice the peak voltage. These two operating points correspond to a logic gate's "1" and "0". When the driver device has a larger peak current, stable point S1 is selected. When it is smaller, S2 is selected. Even with only an extremely small difference in the RTT peak currents, the stable point can be selected, because the circuit is sensitive to the peak current difference between

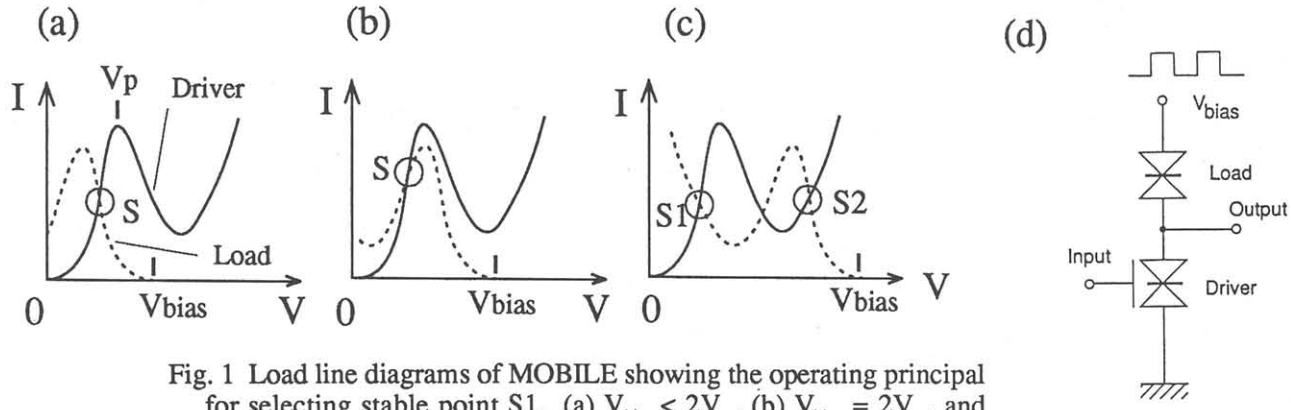

Fig. 1 Load line diagrams of MOBILE showing the operating principal for selecting stable point S1. (a) $V_{bias} < 2V_p$, (b) $V_{bias} = 2V_p$, and (c) $V_{bias} > 2V_p$. (d) MOBILE circuit configuration.

the devices at the transition point. To modulate the peak current amplitude, the RTTs have p^+/n junction gates. Gate voltage varies the depletion-layer width and changes the cross-section of the resonant-tunneling current. The number of input terminals can therefore easily be increased by dividing the gate, taking advantage of the small peak current difference required for switching.

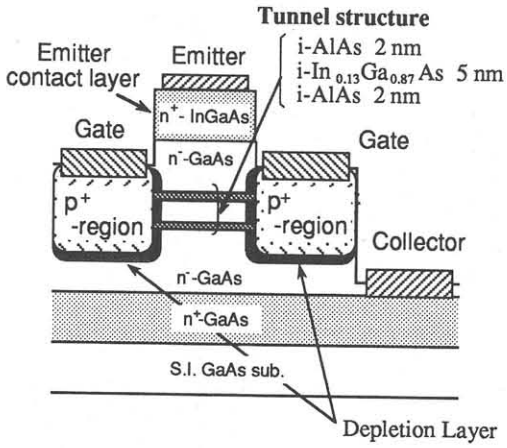

Fig. 2 Schematic structure of RTT having p^+/n junction gates.

3. Device Structure

Figure 2 shows a schematic cross-sectional view of an RTT with p^+/n junction gates. The epitaxial structure was grown by molecular beam epitaxy and consists of n^+-$In_{0.6}Ga_{0.4}As$/n^+-$In_xGa_{1-x}As$/n^+-GaAs emitter contact layers (30/50/20 nm, $2x10^{19}$ cm^{-3}), an n^--GaAs emitter layer (100 nm, $5x10^{16}$ cm^{-3}), an i-GaAs spacer layer (1.5 nm), an i-AlAs/i-$In_{0.13}Ga_{0.87}As$/i-AlAs resonant-tunneling structure (2/5/2 nm), an i-GaAs spacer layer (5 nm), an n^--GaAs collector layer (450 nm, $1x10^{17}$ cm^{-3}), and an n^+-GaAs collector contact layer (200 nm, $4x10^{18}$ cm^{-3}). Ni/Zn/Au/Ti/Au was deposited for the gate electrodes and sintered to form p^+ regions under the gates.

The fabricated MOBILE has 3-input gates with a 1:2:4 gate-width ratio (3, 6, 12 μm), as shown in Fig. 3. Same-width gate electrodes are electrically connected. All measurements were performed at room temperature.

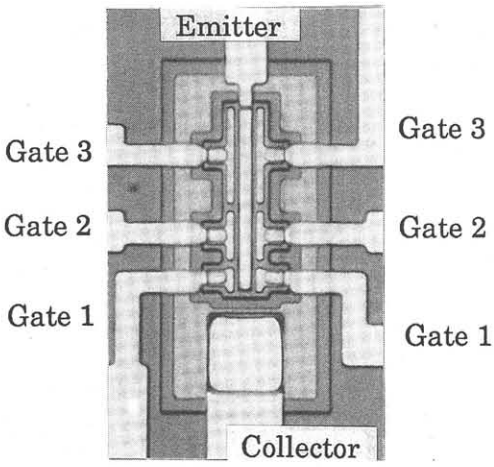

Fig. 3 Photomicrograph of a 3-input RTT with a 1:2:4 gate-width ratio.

4. Weighted Sum Threshold Logic Operations

Figure 4(a) shows the circuit configuration for weighted sum operations. DC voltage (V_{con}) was applied to the gates of the lower RTT to control the logic threshold (L_{th}). The total change in the peak current of the upper device is proportional to the weighted sum of the input signals, where the weights are proportional to the gate widths. Output O of the MOBILE can therefore be expressed as

$$O = u(S - L_{th}),$$

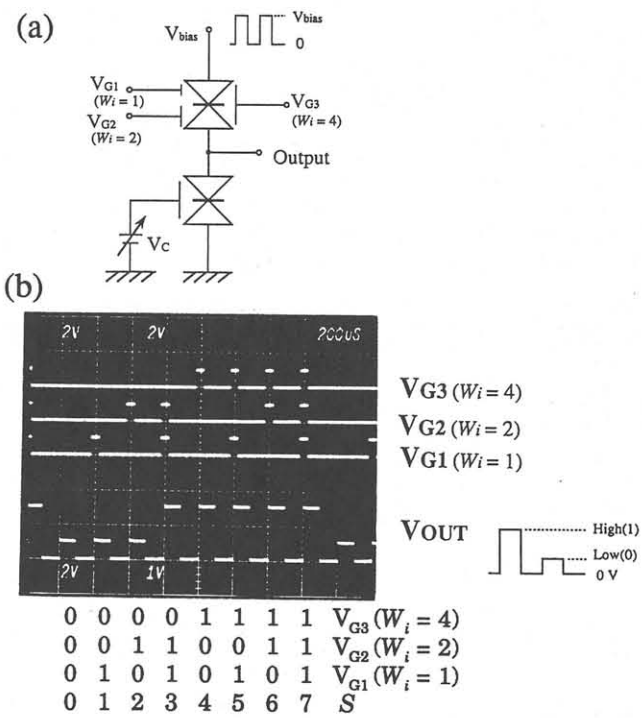

Fig. 4 (a) Circuit configuration of a 3-input MOBILE for positively weighted sums. (b) Example of threshold logic operation, where L_{th} was is at 2.5.

where S ($= \sum w_i x_i$) is the weighted sum, and x_i and w_i are the input signal and the weight of the i-th gate, respectively. Step function $u(y)$ equals 1 at $y > 0$ and 0 at $y < 0$. By changing V_{con}, we can vary L_{th} from -0.5 to 7.5. This indicates that all 8 (2^3) output patterns corresponding to each weighted sum, could be distinguished by one MOBILE. An example of operating output, where L_{th} is set at 2.5, is shown in Fig. 4(b).

One of the advantages of the MOBILE is the availability of both positive and negative weights. Input signals applied to the upper RTT correspond to the positive weights and those applied to the lower one correspond to the negative weights as shown in Fig. 5(a), where, for simplicity, one input terminal was formed for each device. An example of operating output is shown in Fig. 5(b), where L_{th} is set at -0.5. Due to the negative weight for V_G-, output for (V_G+, V_G-) = (0, 1) is "low", in contrast to "high" for the outputs of (0, 0), (1, 0), and (1, 1).

These results verify that MOBILEs can perform the threshold logic function for the weighted sum of input signals. This function has a wide range of applications in new computation architectures such as cellular neural networks[5] and multiple-layered perceptrons[6].

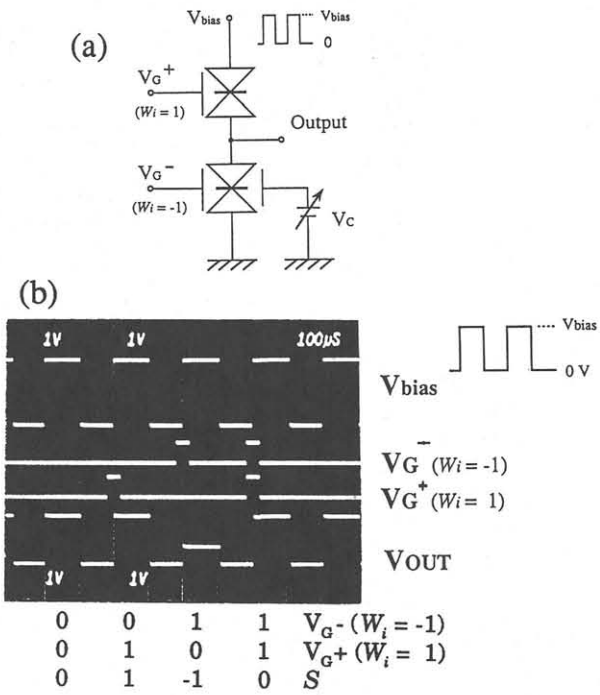

Fig. 5 (a) Circuit configuration of the MOBILE with positive and negative weights. (b) Example of threshold logic operation, where L_{th} is set at -0.5.

6. Conclusions

We have successfully fabricated a MOBILE with multiple-input gates. A MOBILE having 3-input gates with a 1:2:4 width ratio could distinguish all 8 (2^3) input patterns corresponding to each weighted sum, depending on the threshold value selected by the control gate. Moreover, it was demonstrated that both positive and negative weights are possible when input signals are applied to each RTT. These results show that weighted sum threshold logic operation of input signals has been achieved with the MOBILE. This function has a wide range of applications in new computation architectures.

References

1) T. Waho, K. Maezawa, and T. Mizutani: Jpn. J. Appl. Phys., 30 (1991) L2018-2020.
2) N. Yokoyama, K. Imamura, S. Muto, S. Hiyamizu and H. Nishi: Jpn. J. Appl. Phys., 24 (1985) L853-854.
3) S. Sen, F. Capasso, A. Y. Cho and D. Sivco: IEEE Trans. Electron Devices, ED-34 (1987) 2185-219.
4) K. Maezawa and T. Mizutani: Jpn. J. Appl. Phys., 32 (1993) L42-44.
5) H. Harrer, J. A. Nossek and R. Stelzl: IEEE Trans. Neural Networks, 3 (1992) 466-476.
6) M. Minsky and S. Papert: *Perceptrons*, Cambridge, MA : MIT Press, 1969.