Extended Abstracts of the 1994 International Conference on Solid State Devices and Materials, Yokohama, 1994, pp. 535-537

DC Performance of a Tunnel MIS Emitter Auger Transistor

I.V.Grekhov, A.F.Shulekin and M.I.Vexler

194021 St.Petersburg, Russia

Considerable improvement in current gain of a Tunnel MIS Emitter Transistor has been achieved under high base bias condition due to Auger effect initiated by injected hot electrons. DC characteristics of this device have been investigated both theoretically and experimentally. Multistep increase of current gain as a function of base bias, bistable and multistable behavior for common emitter mode operation and some other features arising from Auger effect have been observed.

INTRODUCTION

Tunnel MIS Emitter Transistor (MIS TET) is a promising type of bipolar transistors due to small base width, extremely small base transit time and some other interesting properties. But rather poor current gain obtained in operational devices [1,2,3] was a very serious disadvantage of MIS TET.

In this paper we report high current gain MIS TET. Considerable improvement in gain was achieved by application of high base bias V_{be} so that the averaged energy of injected electrons exceeded the Auger ionization threshold Eg for Si. We will use an acronym MIS TEAT (A=Auger)[4] for our device (Fig.1) since Auger process plays an essential role in this device operation.

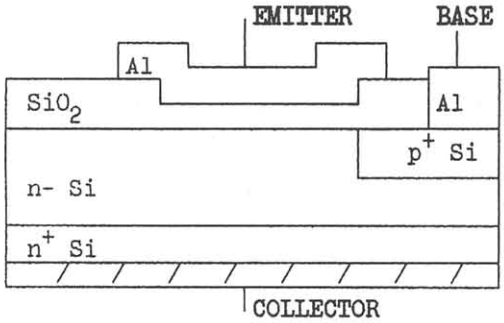

Fig.1. The structure of MIS TEAT.

We study static characteristics of Al/SiO_2/n-Si Auger transistor and develop a simple analytical model of this device. Some modifications of TEAT are briefly discussed.

SAMPLE FABRICATION

The transistors whose structure is shown in Fig.1 were fabricated on n-type Si wafer (N_d=5.0*10^{15} cm^{-3}). The p^+-contact area was made by boron diffusion to a depth of 2-3 mcm. Tunnel-thin oxide (2-3 nm) was formed by oxidation in a stream of dry O_2 at T=700°C. Care has been taken to avoid the tunnel oxide area and heavy doped p^+-area being overlapped. Vacuum-evaporated aluminum was used as the electron injector.

ANALYTICAL MODEL OF MIS TEAT

The energy band diagram of MIS TEAT under both base-to-emitter V_{be} and collector-to-emitter V_{ce} bias conditions with a notation used below is shown in Fig.2. The parameters of this diagram may be calculated for the given V_{be}, V_{ce} [5] in the same manner as it is done for MIS structures without a charge transport. Of course, Auger ionization effect is important namely at high V_{be}.

The discrepancies between our model and the analyses of earlier investigators [2,6] restricted by low V_{be} conditions only are following:

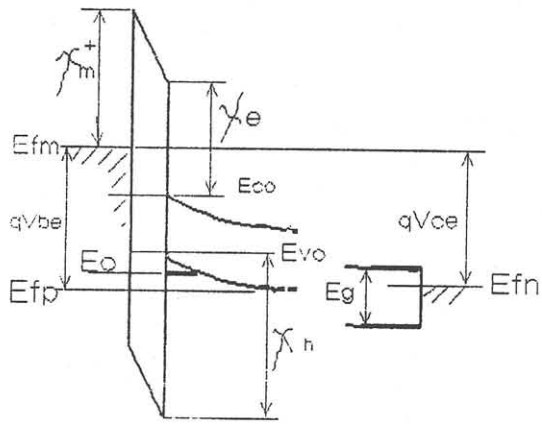

Fig.2.Energy band diagram of MIS TEAT.

i) Auger ionization current j_a is regarded. The energy distribution of injected electrons at a Si/SiO_2 interface peaks sharply near $E_{in} = E_{fm} - E_{co}$, so that all the electrons are assumed to possess an energy E_{in} just after being injected. But their capability of Auger ionization is determined not only by E_{in} but also by an additional energy obtained while passing freely:

$$\Delta E = q \int_0^{\lambda} F(x)\, dx \qquad (1)$$

λ is mean free path, F(x) is electric field in Si. So, Auger generation current is:

$$j_a = j_e^e * P(E_{in} + \Delta E) \qquad (2)$$

where j_e^e is electron component of the emitter current (determined as usual [2,6] and P is averaged number of electron-hole pairs produced by one hot electron [7].

ii) The formation of a series of 2D subbands at Si/SiO_2 interface is taken into account. Supposing that only the ground subband whose bottom we denote as E_0 is occupied by holes we may write for hole leakage into the metal from a discrete level E_0

$$j_e^h = q \frac{2\pi E_0}{h} N_s\, \theta(E_0) \qquad (3)$$

where N_s is a charge density of inversion layer [5], θ is tunneling probability, h is Planck's constant.

Now, terminal currents are:

$$j_e = j_e^h + j_e^e \qquad (4A)$$

$$j_b = j_e^h + j_e^e * P + J_d \qquad (4B)$$

$$j_c = j_e^e * (1+P) - J_d \qquad (4C)$$

where j_d is hole current from interface into the bulk of Si which is important only in saturation region.

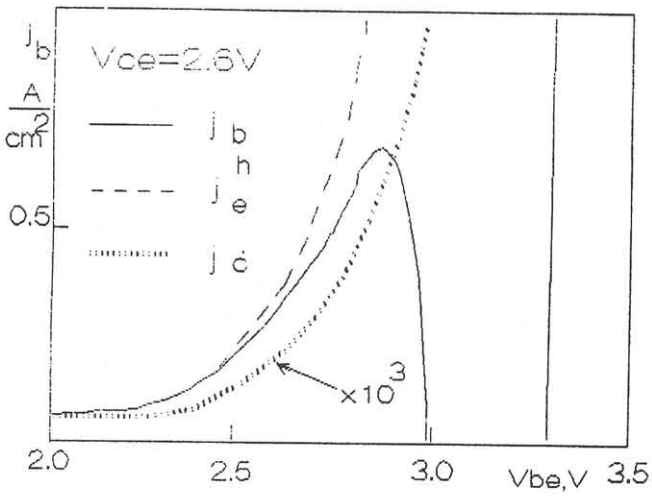

Fig.3.Theoretical DC curves. Parameters: $\chi_m^+ = \chi_e = 1.1$eV, $\chi_h = 2.22$eV, $N_d = 7*10^{15}$ cm^{-3} collector doping), SiO_2 thickness 2.5nm, other parameters are the same as in [6], see also[8].

Typical DC characteristics generated on the basis of the present model are in Fig.3. Due to positive feedback arising from Auger effect, the base current j_b slows down and then drops, at sufficiently high V_{be}. It means that the differential current gain β_d increases and at some V_{be} (in a maximum of $j_b(V_{be})$ for a given V_{ce}) becomes infinite. Since j_e^e, j_e^h increase gradually with V_{be}, all the features of β_d, if any, should be attributed to a behavior of actual dependence $P(E_{in} + \Delta E)$, which had been taken in the simplest form [7] for above computation.

EXPERIMENTAL

Fig.4 shows the DC characteristics of MIS TEATs obtained in operational devices: base current(a), current gain(b), common emitter output characteristics(c).

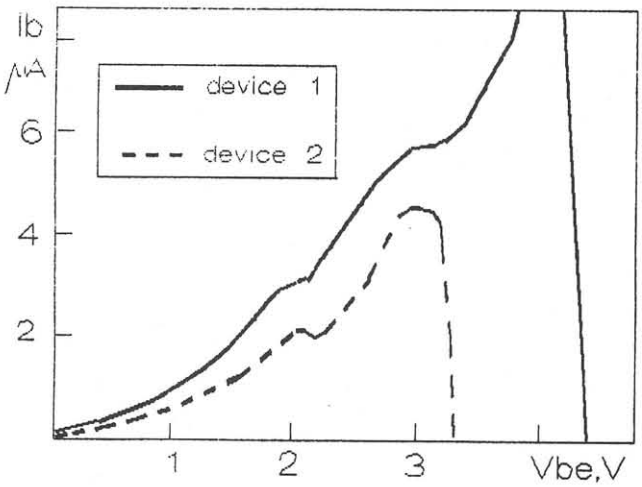

a)

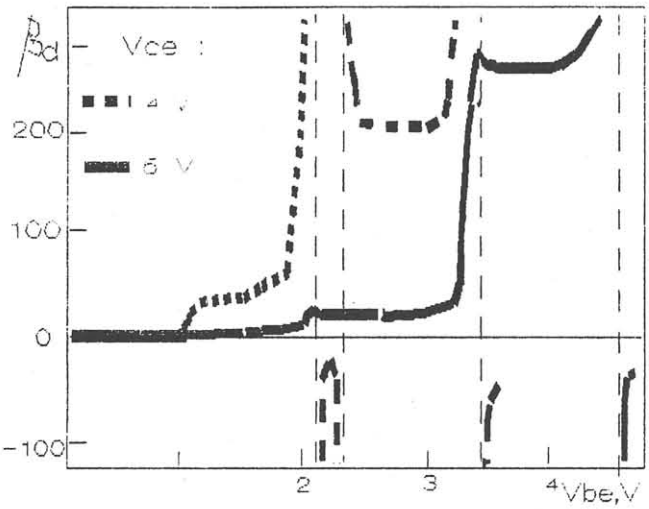

b)

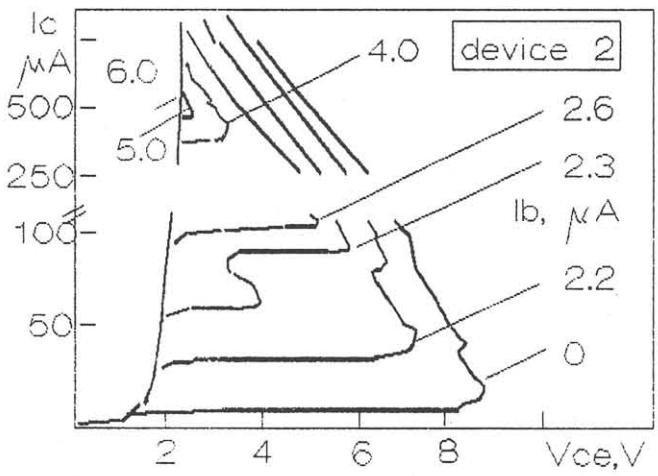

c)

Fig.4.Experimental DC characteistics. Device area 20x40 μm^2

Multistep increase of current gain β_d as a function of V_{be} may be attributed to the multicascade Auger ionization [4] caused by hot electrons or, in our notation, to the stepwise behavior of P. The segments of rapid rise in β_d (V_{be}) are approximately equidistant and the interval between them is E_g/q. Discontinuities with a change of sign may appear instead of some segments.

In the same range of V_{be}, the base current $j_b(V_{be})$ slows down or even drops. An interrelation between the anomalies in $\beta_d(V_{be})$ and $J_b(V_{be})$ which is clearly seen in Fig.4 may be easily demonstrated using our analytical model.

Output characteristics of Auger transistor exhibit S-shape segments. The number of these segments is normally equal to the number of segments of a drop in $j_b(V_{be})$ curve.

The characteristics similar to those shown in Fig.4 were observed in all studies transistor over a wide range of insulator thickness.

MODIFICATIONS OF TEAT

Possible modifications of TEAT are Auger transistor with a doped p^+-base underneath the tunnel insulator and metal base transistor (Fig 5a,b). TEAT with a doped base

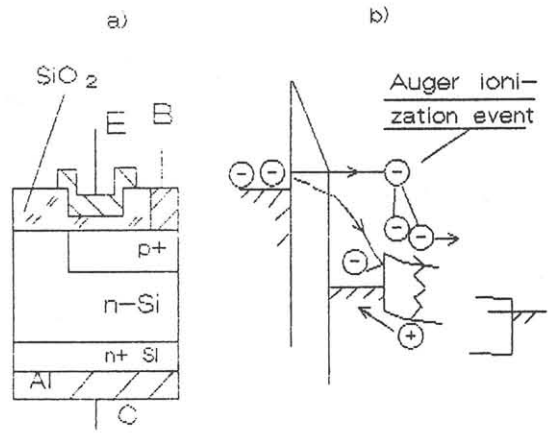

Fig.5. a)Auger transistor with p^+-base.
b)Metal base Auger Transistor.

was fabricated but found to exhibit lower gain than the device with an induced base shown in Fig.1, because of recombination effect in the base. For this reason, fabricating TEATs with an induced base we tried to avoid the thin oxide and p^+-areas being overlapped. Such an overlap could result in a decrease of β_d since it means that TEATs shown in Figs.1,5a are connected in parallel. The advantages of the structures with a doped, metal or superconducting base vis-a-vis the device with an induced base are smaller lateral resistance of the base.

CONCLUSION

...

...Summarizing the results obtained in this paper we may conclude that, due to Auger effect, MIS TEAT is a much more promising device than the devices of this type studied earlier.

REFERENCES

1)T.Yoshimoto,K.Matzumoto,K.Sakamoto and T. Sakata // Jpn.J.Appl.Phys.,v.30,p.L2012,1991.
2)J.G.Simmons and G.W.Taylor //Solid-State Electron.,v.29,p.287,1986.
3)T.Yoshimoto and K.Suzuki // Jpn.J.Appl. Phys.,v.32,p.L180,1993.
4)I.V.Grekhov,A.F.Shulekin and M.I.Vexler // Solid State Commun.,v.87,p.341,1993.
5)T.Ando,A.Fowler,F.Stern / Electronic properties of two-dimensional systems // Rev.Mod Phys.,v.54,N 2,1982.
6)K.M.Chu and D.L.Pulfrey // IEEE Trans.Electron Devices, v.ED-35,p.184,1988.
7)W.E.Drummond and J.L.Moll // J.Appl.Phys. v.42,p.5556,1971.
8)S.M.Sze / Physics of Semiconductor Devices (John Willey & Sons), 2-nd ed.,vol.2.