Extended Abstracts of the 1994 International Conference on Solid State Devices and Materials, Yokohama, 1994, pp. 316-318

Thermally Enhanced Co-Tunneling of Single Electrons in a Si Quantum Dot at 4.2 K

Hideyuki Matsuoka and Shin'ichiro Kimura

Central Research Laboratory, Hitachi Ltd.
Kokubunji 1-280, Tokyo 185, Japan
TEL +81-423-23-1111; FAX +81-423-23-7768

Transport properties of a Si quantum dot at 4.2 K have been studied. A quantum dot is realized in the inversion layer of a Si-MOSFET with a dual-gate structure by introducing controllable tunnel barriers in the narrow channel. Periodic current oscillations due to the single-electron charging effect have been observed. With increasing tunnel barrier heights, Coulomb gaps appear in the *I-V* characteristics. Leakage current in the Coulomb blockade regime is quantitatively described in terms of the inelastic co-tunneling theory at finite temperatures.

1. Introduction

Novel circuits and memories based on the Coulomb blockade of single-electron tunneling have recently been proposed and experimentally demonstrated. [1] However, in such single-electron devices, the process of simultaneous tunneling of different electrons across the neighboring barriers, known as co-tunneling [2], gives rise to a leakage current when the voltage is below the Coulomb-blockade threshold voltage, seriously limiting device operation. This paper reports on co-tunneling phenomena at 4.2 K in a single quantum dot formed in the inversion layer of a Si-MOSFET. We have observed current oscillations resulting from the single-electron charging effect, and found that the leakage current in the Coulomb blockade regime varies linearly with bias voltage, which agrees well with the inelastic co-tunneling theory [2].

2. Results and Discussion

The dual-gate structure [3] used in this study is shown in Fig. 1. The source and drain (not shown) are n^+ regions on a p^--Si substrate, placed 5 μm apart. Both the lower and upper gates are fabricated by electron beam lithography and chemical dry etching. The lower gate, on 10-nm-thick SiO_2, forms a narrow inversion channel at the SiO_2-substrate interface and increases the electron density by applying a positive voltage. The negatively biased upper gate with two arms, insulated from the lower gate by 100-nm-thick SiO_2, introduces potential barriers below the arms and changes the one-dimensional channel into a quantum dot by means of the field effect.

Figure 2 shows typical I_D-V_{LG} characteristics at 4.2 K when a quantum dot is formed in the channel. Current oscillation due to the single-electron charging effect is clearly seen. Peak positions are plotted in the inset of Fig. 2. These plots form a straight line, which means that the oscillation is periodic against V_{LG}. Since the periodicity ΔV_{LG} (= 13.8 mV) corresponds to the voltage

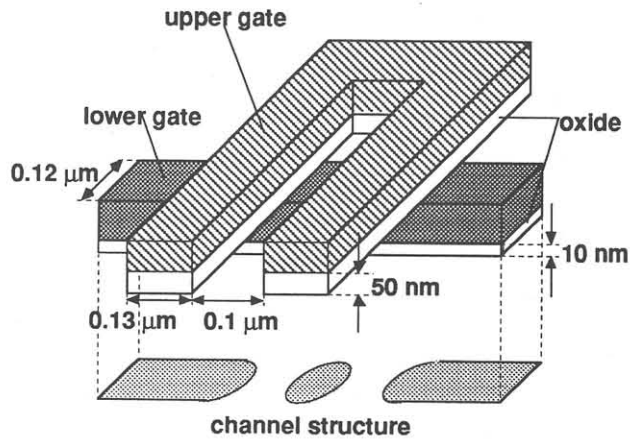

Fig. 1 Dual-gate structure and a quantum dot formed in the channel.

difference required to add a single electron in a dot, the capacitance C_G between the lower gate and the quantum dot can be expressed as

$$C_G = e/\Delta V_{LG} = 1.2 \times 10^{-17}\ \mathrm{F}.$$

Assuming a 10-nm-thick gate oxide, the area of a dot is calculated to be 3500 nm^2, which indicates that the field effect can confine electrons in a smaller region than the geometrical area defined by the dual-gate structure. If we consider a flat disk of an area of 3500 nm^2, a self capacitance of a dot C_S is

$$C_S = 8\,\varepsilon\,\varepsilon_0\, r = 0.9 \times 10^{-17}\ \mathrm{F}.$$

Therefore, the total capacitance of a dot C_D is

$$C_D = C_G + C_S = 2.1 \times 10^{-17}\ \mathrm{F}.$$

Thus, the charging energy of a quantum dot E_C at V_{UG}= - 4 V is

$$E_C = e^2 / 2C_D = 3.8\ \mathrm{meV},$$

which is much larger than the thermal energy at 4.2 K (= 0.36 meV) and is consistent with the observations of Coulomb blockade phenomena at 4.2 K.

Figure 3 shows the I_D - V_D characteristics using V_{UG} as a parameter. A Coulomb gap appears with increases in V_{UG} (i.e., increases in the tunnel barrier height). The extrapolated Coulomb-blockade threshold voltage V_{th}^C when V_{UG}= - 5.8 V is about 5 mV, as indicated by the straight line in Fig. 3. In what follows, the leakage current when V_D is below V_{th}^C is discussed from the viewpoint of co-tunneling. Inelastic co-tunneling [2] is known to be the simultaneous tunneling of different electrons across different barriers via virtual charged states in the quantum dot, as is shown in Fig. 4,. This is thought to be a dominant leakage mechanism when the charging energy is sufficiently larger than the thermal energy. It must be kept in mind that inelastic co-tunneling creates electron-hole excitations in the dot, as is obvious in Fig. 4. Elastic co-tunneling [1] is thought to be negligible in our case since the quantum dot is not small enough.

The inelastic co-tunneling current in a two-barrier system at low temperature is given by [2]

$$I_{CT} \approx (2\pi T)^2 V + e^2 V^3, \qquad (1)$$

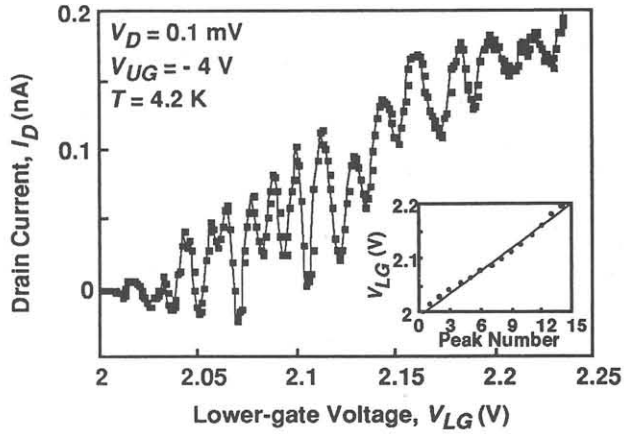

Fig. 2 I_D -V_{LG} characteristics : Current oscillation is due to the single-electron charging effect.
Inset : Peak positions of the current. The straight line shows that the oscillation is periodic. The periodicity is 13.8 mV.

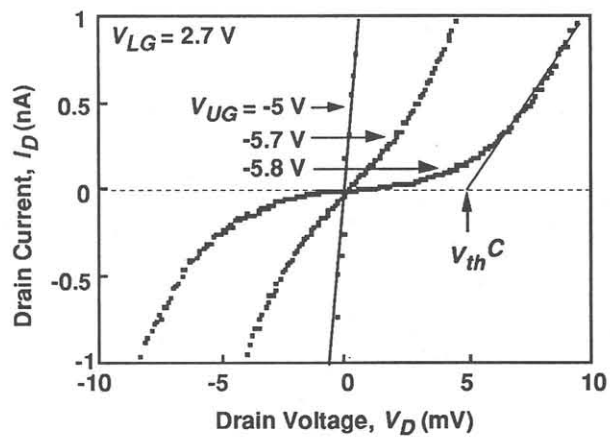

Fig. 3 I_D -V_D characteristics : Coulomb gap becomes visible as V_{UG} becomes more negative. The Coulomb-blockade threshold voltage V_{th}^C is about 5 mV when V_{UG} = -5.8 V.

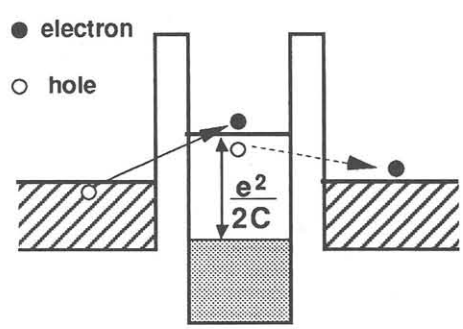

Fig. 4 Mechanism of inelastic co-tunneling.

where V and T are drain voltage and temperature, respectively. To study the experimental data in terms of Eq.(1), a logarithmic plot of Fig. 3 for $V_D \geq 0.3$ mV is shown in Fig. 5. When a quantum dot is formed (i.e., $V_{UG} = -5.8$ V), the data obtained at low voltages lie on a straight line with a slope equal to 1, as is expected from Eq. (1). With increases in V_D, the slope becomes larger than 1 over a particular voltage range, then returns to 1. This linear current at higher voltage agrees well with the classical "orthodox theory" [1] of Coulomb blockade. For quantitative discussion, the I_D - V_D characteristics for 0.3 mV $< V_D <$ 3 mV ($= 0.6\ V_{th}^{C}$) are fitted by Eq. (1) in Fig. 6. The experimental data are fitted well by Eq. (1) giving $T = 6.9$ K. The higher effective temperature extracted from the experiment is thought to be due to the electron-hole excitations created during inelastic co-tunneling in the quantum dot, as shown in Fig. 4.

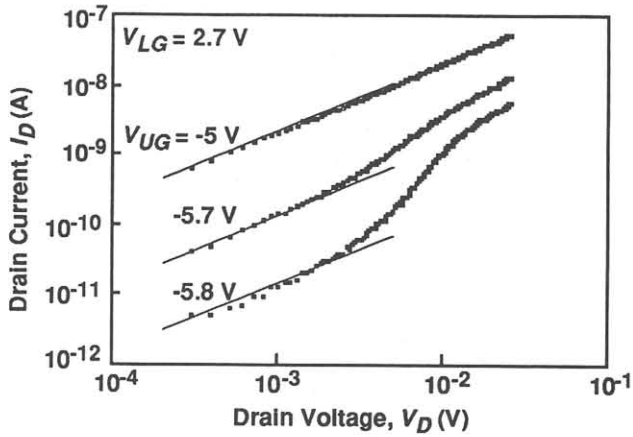

Fig. 5 Log(I_D) - Log(V_D) curves of Fig. 3 for $V_D > 0.3$ mV. Linear dependence of I_D on V_D is seen at low voltages even when a quantum dot is formed (i.e., $V_{UG} = -5.8$ V). Lines with a slope equal to 1 are drawn as guides.

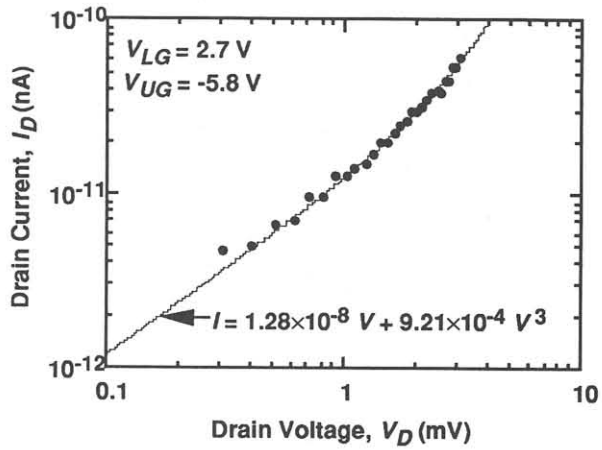

Fig. 6 Fit of I_D -V_D characteristics with Eq. (1). Closed circles denote the experimental results.

3. Conclusion

In conclusion, we have shown a current oscillation at 4.2 K caused by the single-electron charging effect in a quantum dot formed in the inversion layer of a Si-MOSFET with a dual-gate structure. When the tunnel barrier height is increased, Coulomb gaps become visible. Moreover, when the bias voltage is far below the Coulomb-blockade threshold voltage, the current changes linearly with bias voltage, which agrees well with the co-tunneling theory at finite temperatures. The higher temperature extracted from the experimental results is attributed to the electron-hole excitations induced during inelastic co-tunneling.

Acknowledgments

The authors would like to thank Dr. Eiji Takeda for his continuous support and encouragement, and Dr. Kazuo Yano and Dr. Tsuneo Ichiguchi for their valuable discussions. The authors would also like to thank Takashi Nishida and the people in the Process Integration Center for device fabrication.

References

[1] For example: *Single Charge Tunneling, vol. 294 of NATO Advanced Study Institute, Series B: Physics*, edited by H. Grabert and M. H. Devoret (Plenum, New York, 1992).

[2] D. V. Averin and Yu. V. Nazarov, Phys. Rev. Lett. **65**, 2446 (1990).

[3] H. Matsuoka, T. Ichiguchi, T. Yoshimura and E. Takeda, Appl. Phys. Lett. **64**, 586 (1994).