Extended Abstracts of the 1997 International Conference on Solid State Devices and Materials, Hamamatsu, 1997, pp. 176-177

Heavily p-Type Doped AlAs Growth on GaAs (311)B Substrate Using Carbon Auto-Doping for Low Resistance GaAs/AlAs Distributed Bragg Reflectors

Akimasa Mizutani, Nobuaki Hatori, Noriyuki Ohnoki, Nobuhiko Nishiyama, Nobuyuki Ohtake, Fumio Koyama, and Kenichi Iga

Precision and Intelligence Laboratory, Tokyo Institute of Technology,
4259 Nagatsuta, Midori-ku, Yokohama 226, Japan
Phone: +81-45-924-5026, Fax: +81-45-921-0898, E-mail: amizutan@pi.titech.ac.jp

1. Introduction

Stable polarization control for vertical-cavity surface-emitting lasers (VCSELs) is critical for low noise applications in optical interconnects and magnetoptic disk memories. So far, the polarization control of VCSELs using an optical gain asymmetry of non-(001) substrates have been investigated theoretically[1] and experimentally.[2,3] On the other hand, the self organized formation of quantum boxes (disks) on GaAs (311)B substrates[4,5] was proposed. From these potentialities, VCSELs on GaAs (311)B substrates are very attractive for further improvement of VCSEL performances. However, there remains a problem of p-type doping on GaAs (311)B substrates by metalorganic chemical vaper phase epitaxy (MOCVD) [6] i. e. high *p*-type Zn doping was found to be very difficult even either for GaAs or $Al_{0.4}Ga_{0.6}As$, the doping level is lower by two order of magnitudes than on GaAs (100) substrates. It is more difficult to obtain heavily doped AlAs because of its poor incorporation of Zn.[7] The difficulty in *p*-type doping of GaAs/AlAs DBRs results in high series resistance and low power output efficiency of VCSELs. In order to reduce the resistance, it is desirable that the dopant has a low diffusion coefficient and hole concentration is over 10^{19} cm^{-3} to realize δ-doping.[8] Carbon(C) that has a low diffusion coefficient considered to be suitable for δ-doping.[9] We have demonstrated a C auto-doping technique using trimethylaluminum (TMAl) for AlAs grown on GaAs (100) substrates by MOCVD.[10, 11]

In this study, we present a heavy C auto-doping of AlAs on GaAs (311)B substrates using TMAl as a doping precursor. The drastic reduction of electric resistance in *p*-type GaAs/AlAs DBRs on GaAs (311)B substrates has been demonstrated by achieving a C δ-doping into AlAs layers.

2. Carbon Auto-doping on GaAs (311)B

All samples were grown by low pressure (LP) MOCVD. The growth pressure is 76 Torr. The growth temperature is 700 °C for GaAs (100) and 650 °C for GaAs (311)B to get a good surface morphology. Triethylgallium (TEGa) and TMAl were used as metalorganic sources for all the growths and arsine (AsH_3) was used as the As source. Figure 1 shows a net hole concentration of AlAs layers grown on GaAs (311)B and GaAs (100) substrates as a function of V/III ratio. Measured samples are composed of a GaAs buffer, C-doped AlAs and GaAs cap layer on *n*-type GaAs substrates. When a V/III ratio was 6, we

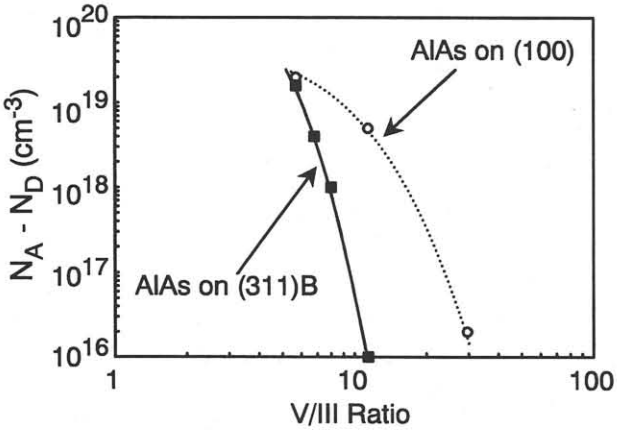

Fig. 1 Net hole concentration in AlAs layer versus V/III ratio. Closed squares are on GaAs (311)B substrates and open circles are on GaAs (100) substrates. The maximum hole concentration of 2×10^{19} cm^{-3} was obtained at V/III ratio=6 in an AlAs layer.

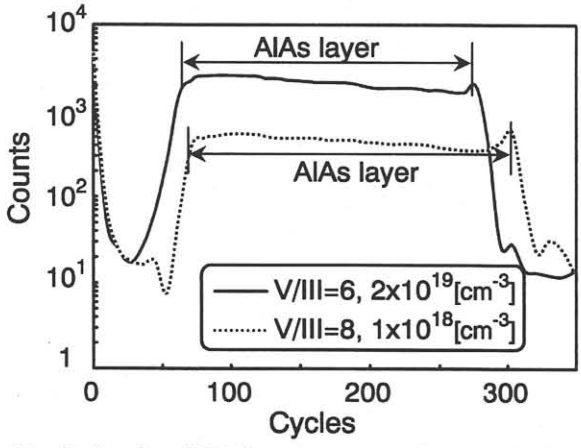

Fig. 2 Results of SIMS measurement of C auto-doped AlAs layers on GaAs (311)B substrates. Vertical axis shows secondary ion mass counts and horizontal axis shows cycles corresponding to the etching depth from the surface. Solid line shows the sample at V/III ratio=6 (2×10^{19} cm^{-3}). Broken line shows the sample at V/III ratio=8 (1×10^{18} cm^{-3}).

obtained the hole concentration as high as 2×10^{19} cm^{-3}. Because the hole concentration is strongly dependent on the V/III ratio, we can control the hole concentration in the range of 10^{16}-10^{19} cm^{-3} by adjusting only the AsH_3 flow rate.

Figure 2 shows the result of secondary ion mass spectra (SIMS) measurements. Measured samples were grown on (311)B substrates with a V/III ratios of 6 and 8, corresponding to a hole concentration of 2×10^{19} cm^{-3} and $4\times10^{18}cm^{-3}$, respectively. The relative amount of C included in AlAs shows 2×10^{3} and 5×10^{2} for a V/III ratio of 6 and 8, respectively. From the results, we can realize that C was incorporated in AlAs as an acceptor.

3. Fabrication of low resistance DBR

We grew a 15 pair *p*-type DBR on a *n*-type GaAs (311)B substrate by using the our C auto-doping technique described above, and fabricated 44μmϕ dot mesas by a wet chemical etching. The schematic of the measured sample is shown in the inset of Fig. 3. Figure 3 shows a current density versus applied voltage (J-V) characteristic of the sample in comparison with a characteristic of conventional Zn doped linearly graded DBR on GaAs (100). GaAs layers were doped by Zn uniformly (5×10^{17} cm^{-3}) and the center of AlAs layers were uniformly doped by C (1×10^{18} cm^{-3}). At GaAs/AlAs interfaces, we inserted C δ-doped AlAs layers (10^{19} cm^{-3}, 100 Å thick) and AlGaAs linearly graded layers (C and Zn doped at a time, 100 Å thick) to reduce energy spikes caused by band discontinuity. When we use a uniform high doping in AlAs, the absorption due to the doping may degrade the reflectivity of DBRs and may limit the reduction of the threshold of VCSELs. Thus, we have introduced a C δ-doping technique to maintain a high reflectivity of DBRs. A J-V characteristic shows a drastic reduction of the resistance. A typical differential resistance of the sample on GaAs (311)B is 7.5 Ω for a 44μm diameter mesa. We also obtained a reflectivity as high as over 98%. By applying the proposed DBR to VCSELs, a drastic reduction of resistance and high efficiency can be expected.

4. Conclusions

We successfully grew a highly *p*-type doped AlAs on a GaAs (311)B substrate by using to C auto-doping technique for the first time. The hole concentration as high as 2×10^{19} cm^{-3} was obtained at a V/III ratio of 6. We have presented a possibility of wide range *p*-type doping by changing only the V/III ratio on GaAs (311)B substrates. Also, we grew a 15 pair *p*-type DBR using the proposed C δ-doping and inserting linearly graded layers at GaAs/AlAs interfaces. We achieved a drastic reduction in electric resistance even in comparison with Zn-doped DBRs on GaAs (100). By applying the proposed technique, Low power consumption and high efficiency (311)B substrate VCSELs can be expected.

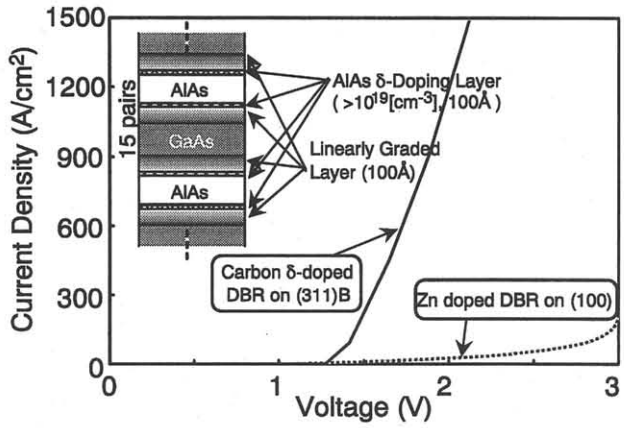

Fig. 3 Current density-Voltage characteristics of GaAs/AlAs DBR with a schematic of the DBR with C δ-doping. Solid line shows the data with C δ-doping and AlGaAs linearly graded layers on GaAs (311)B substrate and broken line shows the data with Zn-doping on GaAs(100) substrate.

Acknowledgements

This study was supported by the Grant-in-Aid COE program #07CE2003, "Ultra-Parallel Optoelectronics" of the Ministry of Education, Science, Sports and Culture.

References

1) T. Ohtoshi, T. Kuroda, N. Niwa and S. Tsuji: Phys. Lett. **65** (1994) 1886.
2) R. Nötzel, J. Temmyo and T. Tamamura:**369** (1994) 131.
3) K. Nishi, R. Mirin, D. Leonard, G. Medeiros-Rigbeiro, P. M. Petroff and A. C. Gossard: Appl. Phys. **80** (1996) 3466.
4) M. Takahashi, P. O. Vaccaro, T. Watanabe, T. Mukaihara, F. Koyama and K. Iga: Jpn. J. Appl. Phys. **35** (1996) 6102.
5) Y. Kaneko, S. Nakagawa, T. Takeuchi, D. E. Mars, N. Yamada and N. Mikoshiba: Electron. Lett. **31** (1995) 805.
6) A. Mizutani, N. Hatori, N. Ohnoki, N. Nishiyama, N. Ohtake, F. Koyama and K. Iga: Jpn. J. Appl. Phys. to be submitted.
7) H. Maekawa, T. Mukaihara, Y. Hayashi, N. Ohnoki, T. Tamanuki, F. Koyama and K. Iga: Digest of International Confernce on metal organic vaper phase epitaxy (ICMOVPE VII) No. P3-7 (1994) 278.
8) G. Reiner, E. Zeeb, B. Möler, M. Ries and K. J. Ebeling: Photon. Thechnol. Lett. **7** (1995) 730.
9) B. Weigl, M. Grabherr, R. Jäger, G. Reiner and K. J. Ebeling: Digest of 15th IEEE international semiconductorlaser conference PDP2 (1996).
10) S. Sekiguchi, T. Miyamoto, F. Koyama and K. Iga: J. Appl. Phys. **36** (1997) 372.
11) N. Hatori, A. Mizutani, N. Nishiyama, T. Miyamoto, F. Koyama and K. Iga: Europian workshop on metal organic vaper phase epitaxy (EWMOVPE VII) H8 (1997).