Extended Abstracts of the 2000 International Conference on Solid State Devices and Materials, Sendai, 2000, pp. 456-457

B-9-3

Non-Destructive and Contactless Monitoring Technique of Si Surface Stress by Photoreflectance

Masayuki Sougawa[1], Takeshi Kanashima[1], Masashi Agata[1], Kaoru Yamashita[1], Masanori Okuyama[1], Akira Fujimoto[2] and Koji Eriguchi[3]

[1]*Division of Advanced Electronics and Optical Science, Graduate School of Engineering Science, Osaka University, 1-3 Machikaneyama, Toyonaka, Osaka 560-8531, Japan*
Phone: +81-06-6850-6331 Fax: +81-06-6850-6341 e-mail: sam@semi.ee.es.osaka-u.ac.jp
[2]*Dept. Electrical Engineering, Wakayama National College of Technology, 77 Noshima, Nadacho, Goboshi 644-0023, Japan*
[3]*ULSI Process Tech. Dev. Ctr., Matsushita Electronics, 19 Nishikujo-Kasugacho, Minami-ku, Kyoto 601-8413, Japan*

1. Introduction

Recently, much attention has been paid to fine fabrication of ultra large-scale integrated circuit (ULSI). There arise many problems in material prosesses for the fine fabrications. Especially in the oxydation process, the stress is induced at Si/SiO_2 interface, and affects resultant property of Si surface. Photoreflectance (PR) spectroscopy, a kind of modulation reflectance spectroscopy[1], is a precise technique to study the band structure of semiconductor[2]. Moreover, it is highly sensitive to interface property because the penetration depth of the probe light is about 10 nm and the signal intensty is dependent on Si surface electric field. The PR spectroscopic method is also found to be useful for in-situ characterization of the plasma process-induced damage on Si substrate and surface temperature without electrodes[2].

In this study, we have applied PR spectroscopy to monitor stress of Si surface.

2. Analysis of PR Signal Intensity

The PR spectrum is expressed as the ratio of small reflectance change induced by modulation light (ΔR) to the reflectance (R), $\Delta R/R$. According to the third derivative theory by Aspnes[1], the PR signal intensity is proportional to the electric-field-induced change of square of the surface electric field, $\Delta(E^2)$. Change of square of the surface field is proportional to the surface potential change, $\Delta\Psi$ under the condition of homogeneous donor or acceptor concentration. Therefore, $\Delta R/R$ is proportional to $\Delta\Psi$ as follows,

$$\Delta R/R \propto \Delta(E^2) \propto \Delta\Psi.$$

3. Experimental Setup and Samples

Figure 1 shows experimental setup for the PR measurement used in this study. Surface potential of the sample was modulated by chopped light of He-Ne laser. The sample was irradiated also by a probe light from a Xe discharge lamp for measuring the sample reflectance. All PR measurements were performed in air at room temperature.

Si diaphragm is used to produce strain on the surface. Figure 2 shows cross sectional view of the Si diaphragm. The sample is 0.02 Ωcm n-Si(100) wafer. The diaphram is made by anisotropic etching in ethylenediamine pyrocatechol (EDP). The diaphragm size is about 2.5x2.5 mm^2, and the thickness is 50 μm. The diaphragm is pressed by N_2 gas or pulled by vacuum pump to control lateral strain of Si surface. Vertical displacement and strain of the diaphragm were calculated by finite element method, and the displacement was measured by optical displacement gauge. Lateral distribution of PR signal is obtained by scanning the light beams horizontally along the Si surface, and spectral changes are obtained. The strain is obtained by the peak shift which relates to L-point transition in energy-band structure of Si. When the diaphragm was pressed from the lower side by the N_2

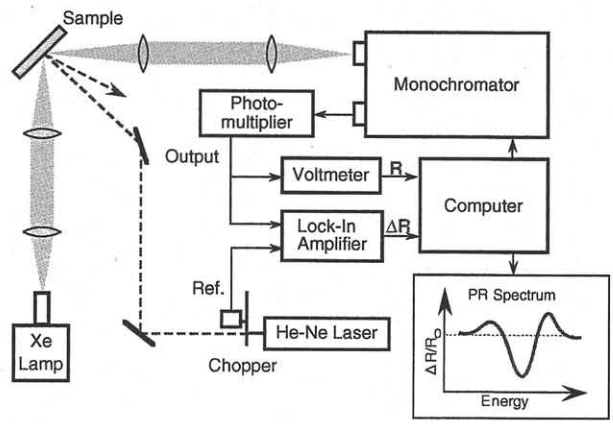

Fig. 1. Measument system for photoreflectance(PR) spectroscopy.

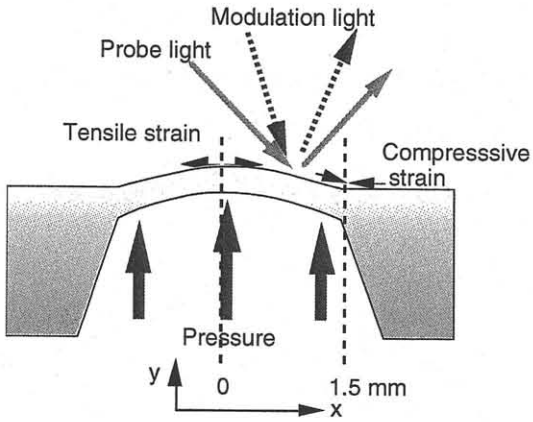

Fig. 2. Cross sectional view of sample.

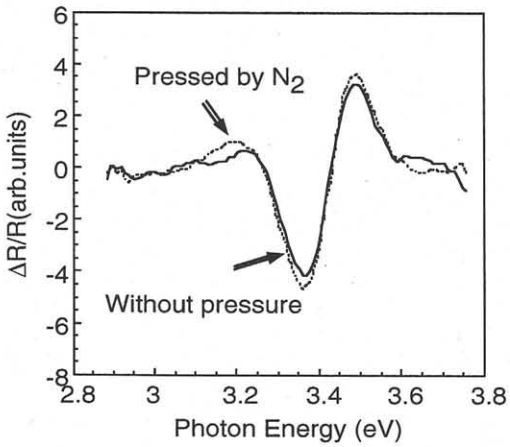

Fig. 3. Dependence of the transition energy at L-point on the pressure.

gas, the tensile strain presents at the center of diaphragm, and compressive strain presents at the corner.

4. Results and Discussions

The PR spectra were measured for the sample with and without the N_2 gas pressing(Fig. 3). Transition energy is determined from energy positions of three peaks.[1] The transition energy is different in two spectra of Fig.3, and decreases with increasing the pressure. In this case, tensile strain is observed, because the probe light and modulation light are applied at the center of diaphragm.

To confirm the energy change resulting from the strain, spatial distribution of strain is observed by scanning the light on the Si surface. Figure 4 shows the dependence of transition energy of L-point on the position of Si surface. The estimated strain is also shown in this figure. The transition energy depends on the lateral position, and its behavior is similar to the calculated strain. Figure 5 shows the relation between the calculated stress and the transition energy. The transition energy shows good correlation with calculated strain. Moreover, there is reversal of strain from the left end to the right, and is zero strain at the middle point between the left end and the

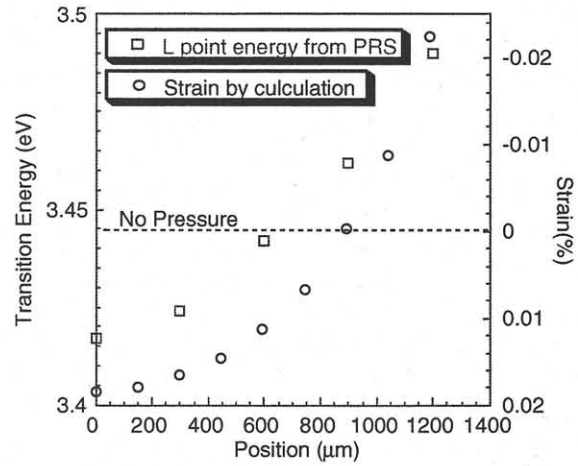

Fig.4. Dependence of transition energy on the posisioin of Si surface along x-axis.

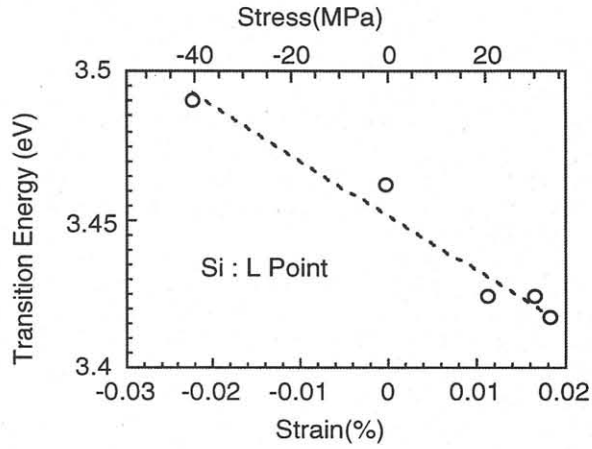

Fig. 5. Relation between calculated stress and transition energy.

right. Thus, it is thought that these energy shifts result from the change of strain only on the Si surface, because of the good agreement between the calculated surface strain and the transition energy.

5. Conclusion

PR spectroscopy has been applied for the characterization of the Si surface stress. The L-point transition energy obtained from PR signal decreases with increase of strain. The behavior of strain calculated along the Si surface is in good agreement with that of the transition energy measured by PR. Thus, it is thought that Si surface strain can be obtained from PR technique. Moreover, PR would be applicable to stress characerization of Si with thin SiO_2 film structure. So, PR spectroscopy is concluded to be a powerful tool for sensitive monitoring of Si surface stress.

References

[1] D. E. Aspnes: Surf. Sci. **37** (1973) 418.
[2] T. Imai, A. Fujimoto, M. Okuyama and Y. Hamakawa: Jpn. J. Appl. Phys. **35** (1996) 1073.