Extended Abstracts of the 2000 International Conference on Solid State Devices and Materials, Sendai, 2000, pp. 104-105

D-1-4

Resonant Tunneling Cathodes Using GaAs/AlAs Quantum Structures

H. Mimura, K. Okamura, Y. Neo, H. Shimawaki and K. Yokoo

Research Institute of Electrical Communication, Tohoku University
2-1-1 Katahira, Aoba-ku, Sendai 980-8755, Japan
Phone; +81-22-217-5511 Fax +81-22-217-5513 e-mail: mimura@riec.tohoku.ac.jp

1. Introduction

Much attention has been paid on vacuum microelectronics which aims at realizing novel devices in high frequency and hard electronics as well as a flat panel display. An electron source with narrow energy spread is one of the key components for vacuum microelectronics, but has not been available yet. The resonant tunneling effect can be used as an energy band pass filter to obtain monochromatic electron beams, because the transmittance in an electron tunneling becomes sufficiently high and narrow [1-3]. Recently, the resonant Fowler-Nordheim tunneling emission has been observed for metal-oxide-semiconductor (MOS) cathodes [4]. However, the resonance tunneling emission from conventional quantum well structures has not been seen yet.

The paper describes fabrication of the resonant tunneling cathodes with conventional GaAs/AlAs quantum structures and shows the resonant tunneling electron emission from the cathodes.

2. Experiments

We have fabricated plane cathodes with single and multi-quantum-wells using molecular beam epitaxy (MBE) and photolithography techniques. Figure 1 (a) and (b) shows a schematic structure and a schematic energy band diagram of the GaAs/AlAs resonant tunneling cathode with a single-quantum-well, respectively. Energy levels of the subbands formed in a quantum well are less than 1 eV, because energy difference in the conduction bands between GaAs and AlAs is about 1 eV. On the other hand, since the electron affinity of GaAs is about 4 eV, electrons should be sufficiently accelerated after tunneling through the quantum well to overcome the potential barrier between an n^+-GaAs gate electrode and vacuum. Therefore, we provided an undoped GaAs layer thick enough to accelerate electrons above the potential barrier. However, electrons considerably lose their kinetic energy in the acceleration layer by phonon scattering. As a result, it is predicted that only a fraction of electrons are emitted into vacuum as an emission current and the majority are absorbed in the gate electrode as a diode current.

The cathodes were set in a vacuum chamber, and diode and emission currents were simultaneously measured as a function of the gate voltage in the vacuum of 5×10^{-8} Torr, as shown in Fig. 2.

3. Results and discussion

Figure 3 shows the dependence of diode and emission currents on the applied gate voltage for the cathode with a single-quantum-well of GaAs /AlAs. The thicknesses of GaAs/AlAs are 2.83 nm and 2.83 nm, respectively. A current peak due to the resonant effect in electron transport is observed in the diode current at the gate voltage of about 6 V, and sharp rising in the emission current is obtained at the neighborhood of the gate voltage. This experimental result suggests that the emission

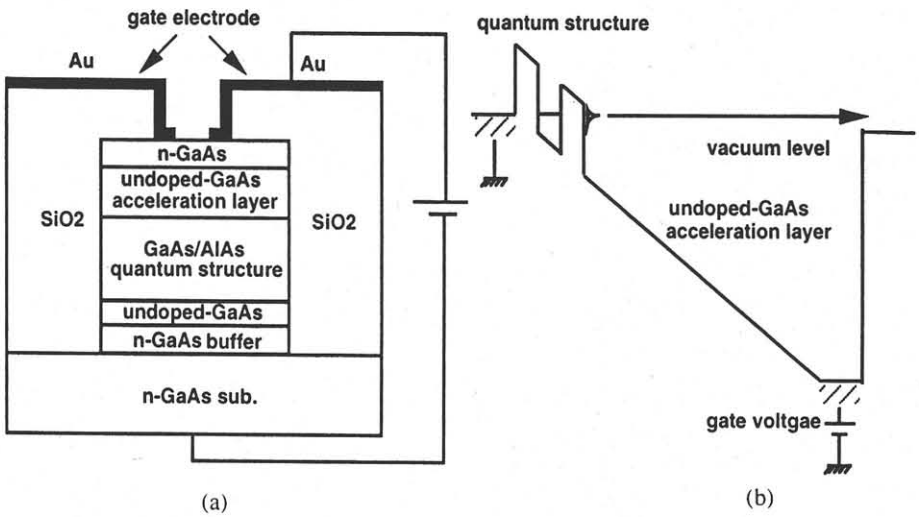

Fig. 1 Schematic structure (a) and a schematic energy band diagram (b) of the GaAs/AlAs resonant tunneling cathode with a single-quantum-well, respectively.

current reflects the resonant effect of electron transport in the quantum well. The emission current, however, is almost saturated at around the peak current with the gate voltage, though a fractional drop in the current is clearly observed following the sudden drop in the diode current due to the negative resistance. The emission current is extremely low as compared with the diode current, which indicates that phonon scattering is very strong.

Figure 4 shows the diode and emission currents of the cathode with a double-quantum-well as a function of the gate voltage. The thicknesses of GaAs/AlAs are 19.8 nm and 2.83 nm, respectively. The emission current shows a sharp peak at the gate voltage of 9 V where the diode current also becomes peak due to the resonant tunneling effect. In addition, the diode current shows another peak at about the gate voltage of 11 V. At this voltage the emission current increases drastically, as similar to the characteristic shown in Fig. 3. The reason for the different characteristics in the resonant tunneling emission is not clear at present. We are trying to measure energy distribution of emitted electrons at the resonance points.

4. Conclusions

We have fabricated the resonant tunneling cathodes with conventional GaAs/AlAs quantum structures, and measured emission characteristics. Sharp rising in the emission current is clearly observed at the almost same gate voltage where current peaks in the diode currents appear due to the resonant tunneling effect of electron transport in quantum wells. These experimental results suggest that the emission current reflects the resonant-tunneling effect in GaAs/AlAs quantum structures.

Acknowledgments

A part of this work was carried out at the Super Clean Room of Laboratory for Electronic Intelligent System, Research Institute of Electronic Communication, Tohoku University. This work was partially supported by a grant-in-aid for scientific research from the Ministry of Education, Science, Culture and Sports of Japan, the Fund from Broadcasting, and the Murata Science Fundation.

References

[1] R. Tsu and L. Esaki, Appl. Phys. Lett. **22**, 562 (1973).

[2] T. Ohshima, M. Okamoto and K. Kuroda, Jpn. J. Appl. Phys. **34**, L1390 (1995).

[3] H. Mimura, M. Hosoda, N. Ohtani, J. Ikeda, Y. Neo, H. Shimawaki and K. Yokoo, Technical Report of IEICE Japan, ED**96-144** (1996) p.61.

[4] H. Mimura, Y. Abe, J. Ikeda, K. Tahara, Y. Neo, H. Shimawaki and K. Yokoo, J. Vac. Sci. Technol. B **16**, 803 (1998).

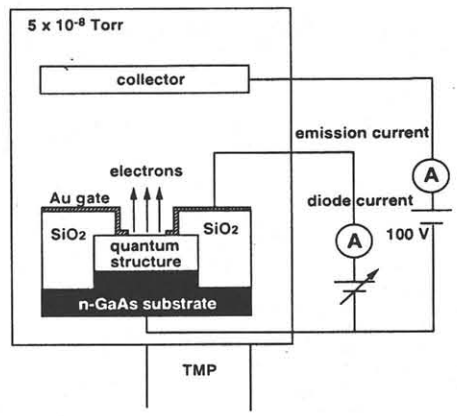

Fig. 2 Schemetic diagram of the experimental set-up.

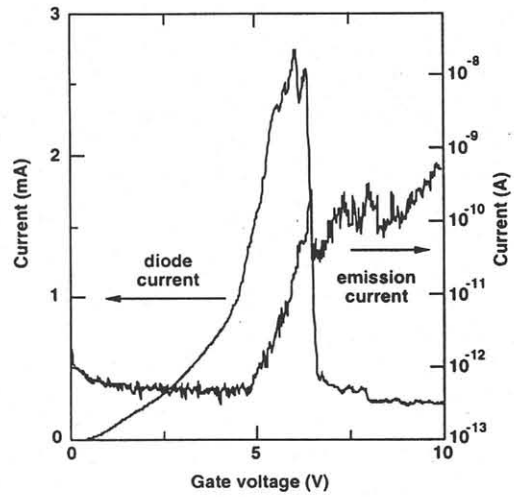

Fig. 3 Dependence of diode and emission currents on the applied gate voltage for the cathode with a single-quantum-well of GaAs (2.83 nm) /AlAs (2.83 nm).

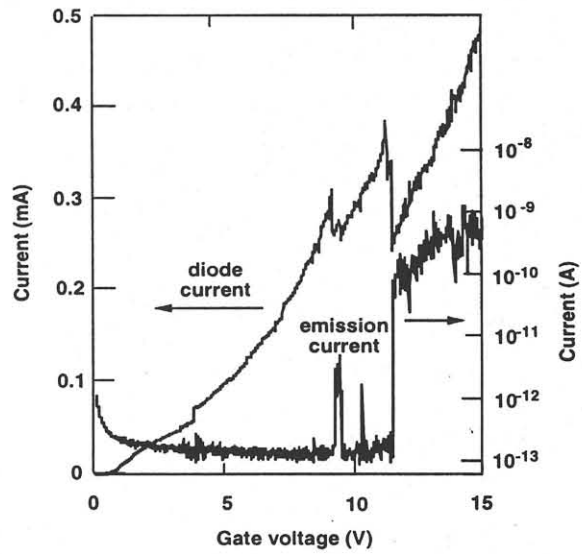

Fig. 4 Dependence of diode and emission currents on the applied gate voltage for the cathode with a double-quantum-well of GaAs (19.83 nm) /AlAs (2.83 nm).