Extended Abstracts of the 2000 International Conference on Solid State Devices and Materials, Sendai, 2000, pp. 310-311

D-3-4

Single FIR-Photon Detection Using an RF-SET

T. Kutsuwa, V Antonov[1], O. Astafiev[1], S. Komiyama
Department of Basic Science, University of Tokyo, Komaba, Meguro-ku, Tokyo, Japan
Tel/Fax:+*81-03-5454-6762* e-mail: *kutsuwa@mujin.c.u-tokyo.ac.jp*
[1]*Japan Science and Technology Corporation (JST)*

Single photons in the far-infrared (FIR) range have been detected by using a semiconductor quantum dot (QD) operated as a single-electron transistor (SET): Individual events of photon absorption via cyclotron resonance were detected as a switch of the SET-conductance. [1, 2] The attained sensitivity (NEP ~ $10^{-22} W/Hz^{1/2}$) promises that the detection scheme will be used to develop a useful FIR-photon detector for application. However, a few technical problems remain, which should better be resolved or improved before the scheme is brought into real use. We tackle one such problem in this work.

Since the experiments applied a standard lock-in technique for studying SET-conductance,[1, 2] the detection speed was relatively slow, being limited by an instrumental time constant of 1 *ms*. This also implied that the photon detection was possible only in a relatively narrow range of magnetic field (3.4~4.1*T*), where the recombination lifetime of an excited electron eventually exceeded the instrumental time constant (1*ms*): This restricted the wavelength range of photon detection (λ = 0.17~0.22 mm). From the viewpoint of application, therefore, faster operation of an SET is desirable. This is not only because it makes faster measurements possible and expands the spectral range of detection, but also because it might, in general, enable us to construct a variety of SET-based photon-detectors utilizing other excitation mechanisms than the cyclotron resonance.

We have improved the time resolution of detection by implementation of an RF-SET, [2] in which an LC resonator (30MHz or 1GHz) is loaded with an SET. Individual events of photon absorption that switch the SET-conductance are recorded as a reduction (or an increment) in the RF power reflected from the LC resonator. Already in our present scheme with an RF-amplifier placed at room temperature, the time constant of SET is reduced to less than 10 μs. We will discuss in detail resultant dynamic range of photon detection as well as noise characteristics of the RF-SET detector.

1. *S.Komiyama, O.Astafiev, V.Antonov, T.Kutsuwa, & H.Hirai, Nature* ***403****, 405 (2000).*
2. *V.Antonov, O.Astafiev, T.Kutsuwa, H.Hirai & S.Komiyama, Physica E* ***6****, 367 (2000).*
3. *R.J.Schoelkopf, P.Wahlgreen, A.A.Kozhevnikov, P.Delsing, &D.E.Prober Science****280****, 1238-1241 (1998)*

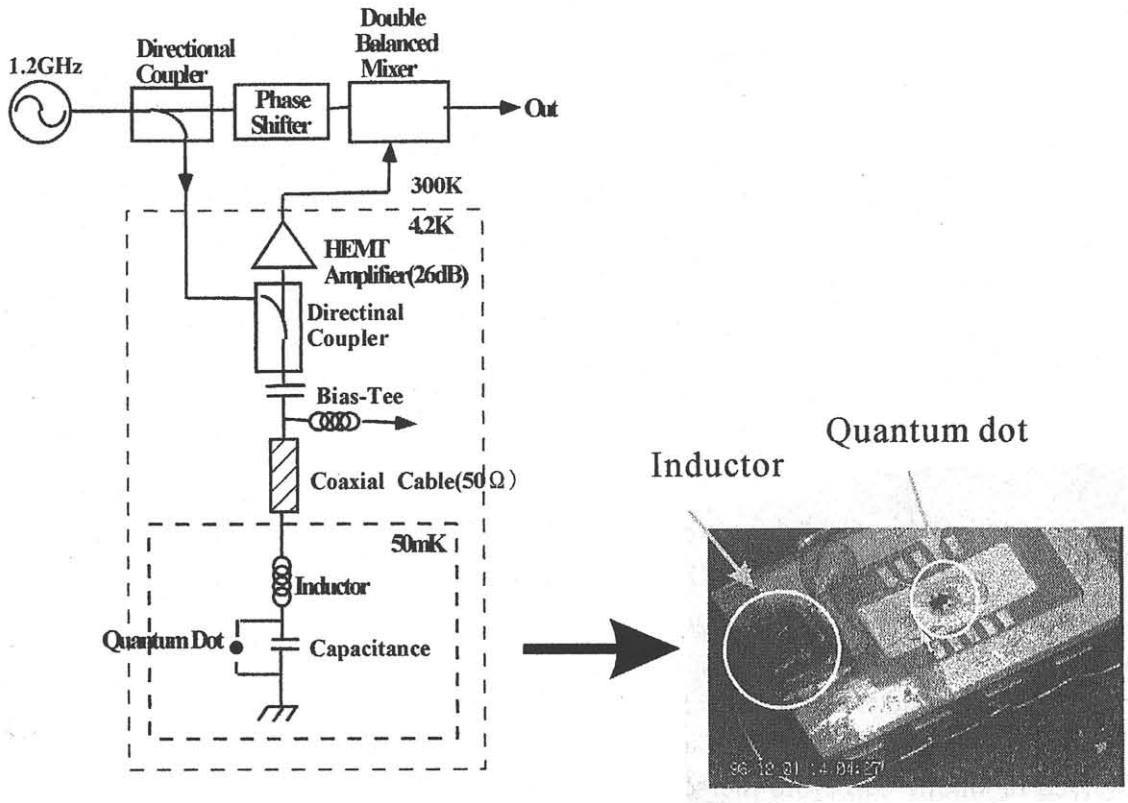

Fig.1 Schematics of the experimental setup of the RF-SET(1GHz) and picture of chip carrier with a inductor

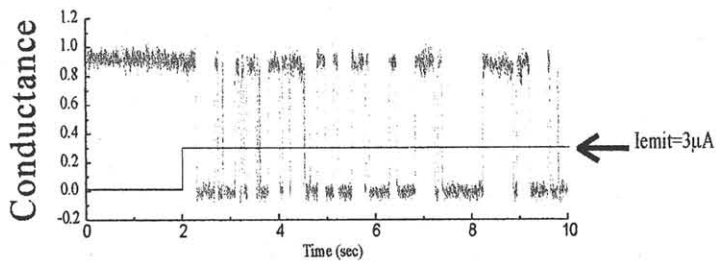

Fig.2 Conductance switching through a QD under FIR-photon

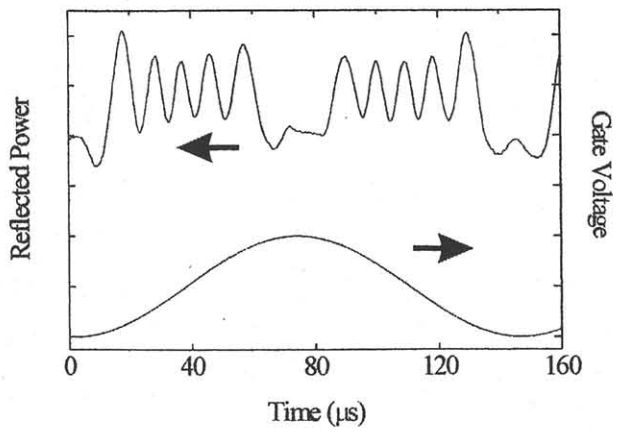

Fig.3 Coulomb oscillation using an RF-SET
(A sinusoidal voltage of 5kHz is applied to the gate electrode)