Extended Abstracts of the 2001 International Conference on Solid State Devices and Materials, Tokyo, 2001, pp. 80–81

C-2-4

AlGaAs/GaAs PHEMT MMIC Broadband Power Amplifier from 17GHz to 36GHz for K/Ka-Band Applications

Y. C. Lee and C. S. Park*

School of Engineering, Information and Communications University
58-4 Hwaam, Yusong, Taejon 305-732, Korea
Phone:+82-42-866-6165 , Fax:+82-42-866-6110
E-mail: yi_young@icu.ac.kr, parkcs@icu.ac.kr*

1. Introduction

There is a need for broadband, high gain, moderate power level MMIC power amplifiers in the K/Ka-band frequencies for emerging commercial wireless applications. Applications include local multipoint distribution services(LMDS), fixed satellite services, and intelligent transport system(ITS).

K/Ka-band power amplifiers have been realized with GaAs MESFET, HBT and PHEMT technologies using various design techniques [1-3]. Because of its excellent transport properties, PHEMT is ideally suited for MMIC amplifier implementation for high gain and high frequency applications.

The most common approach to achieve broadband gain is the negative feedback, distributed, or balanced scheme. The negative feedback topology has a drawback of the degradation of the gain. The operating bandwidth of the distributed and balanced amplifier is limited by the bandwidth of the transmission line and the coupler [4,5].

This paper presents the broadband power amplifier developed for 17 to 36GHz K/Ka-band applications.

2. AlGaAs/GaAs PHEMT

The amplifier was implemented using a commercial PHEMT MMIC foundry (Eoncom, Korea), which supports 0.25 um gate length technology. The typical characteristics of the technology biased at Vds=2V are :

G_m = 475mS/mm, Idss = 200mA/mm
Vp = -0.6V, $f_T \geq 75$ GHz
Ga = 12dB at 12GHz

The device and MMIC utilize a 100-um thick GaAs substrate, through-hole via under every source for high gain and excellent thermal properties, and airbridged source interconnects.

3. Power Amplifier Design

For broadband amplifier design, balanced topology using Lange-coupler and matching network with radial stubs were used. Radial stubs are compact in size and have both a broadband behavior and well-defined low impedance levels [6,7]. The microstrip lines were added at the source terminal of the PHEMT in order to improve the transistor stability. The power amplifier was composed of two-stage common-source scheme for class A operation. The first stage uses 2 fingers of 50 um PHEMT to drive second stage of 200 um device. The input, inter-stage, and output matching networks were designed within the MMIC using radial stubs and transmission line of microstrip structure. The block diagram of the amplifier and the photograph of the fabricated MMIC power amplifier are shown in Fig. 1 and 2, respectively. The chip size of the MMIC power amplifier is 2.16mm x 2.0mm.

4. Power Amplifier Performance

The two-stage balanced amplifier gain and return-loss performances are shown in Fig. 3. The amplifier has an average gain of 11.5dB that peaks with 13.9dB at 31GHz, and rolls off to 3dB gain at 17.2GHz and 36.4GHz when biased with +5V supply. The input(S_{11}) and output(S_{22}) return losses are less than –10dB. A typical frequency response of the amplifier is shown in Fig. 4 for output power. As shown there, the output power at 1dB compression is greater than 20dBm from 24~28GHz, and greater than 23dBm at 30.5GHz. Fig. 5 shows the output power performance as a function of input power for various gate bias voltages at 26.5GHz. As the gate voltage is increased, the output power increases a little bit better. The power amplifier is capable of 21.3dBm output power with small-signal gain of 11.2dB at 26.5GHz, and draws about 144mA when gate voltage is biased with 0.15V.

5. Summary

In this paper, broadband (up to 19GHz bandwidth) monolithic K/Ka-band balanced power amplifier using 0.25um GaAs PHEMT technology has been demonstrated. The average performance of the power amplifier is 11.5dB small-signal gain and 20dBm from 24~28GHz and 23dBm at 30.5GHz. This power amplifier is suitable for future wireless communication applications at K/Ka-band frequencies.

Acknowledgments

The authors would like to thank Mr. H. C. Seo and his colleagues of the EONCOM for PHEMT process support. This work was

financially supported in part by the Ministry of Information and Communication of Korea.

References

[1] A. Huber, et al, *Electronics Letters, Vol. 35, No. 1, (1999), P. 53*

[2] Y. Kalayci, et al, IEEE MTT-S Symp. Dig., Vol.3, (1995), P. 21

[3] Chen Xuejun, et al, 2nd ICMMT 2000, (2000), P.68

[4] M W Geen et al, *IEE Colloquium on, (1989), P.5/1*

[5] George D. Vendelin et al, *Microwave Circuit Design, John Wiley & Son, (1990), P.253*

[6] V. Sadhir and I. Bahl, *Microwave Journal, August, (1991), P.102*

[7] Franco Giannini et al, *IEEE Trans. Mircowave Theory tech., VOL. 36, NO. 2, (1998), P. 305*

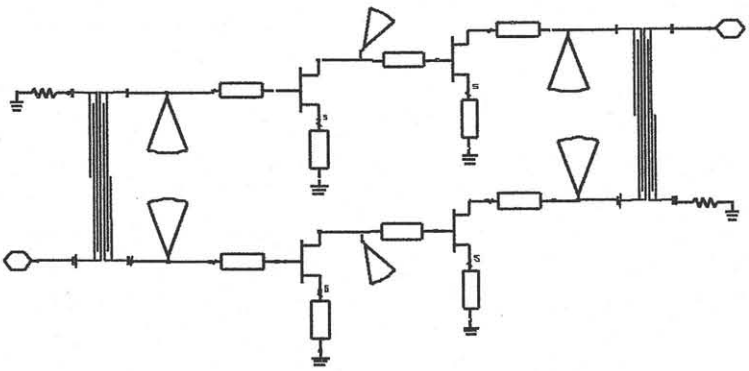

Fig. 1 Block diagram of MMIC broadband power amplifier

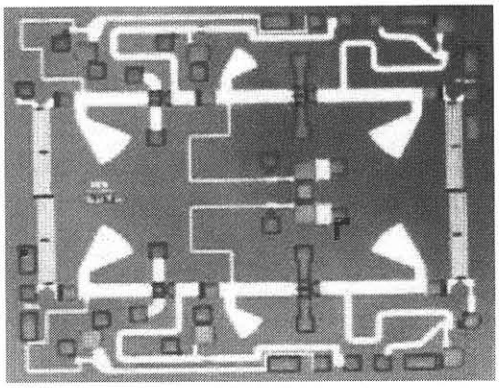

Fig. 2 Fabricated MMIC broadband power amplifier chip (2.16X2.0mm^2)

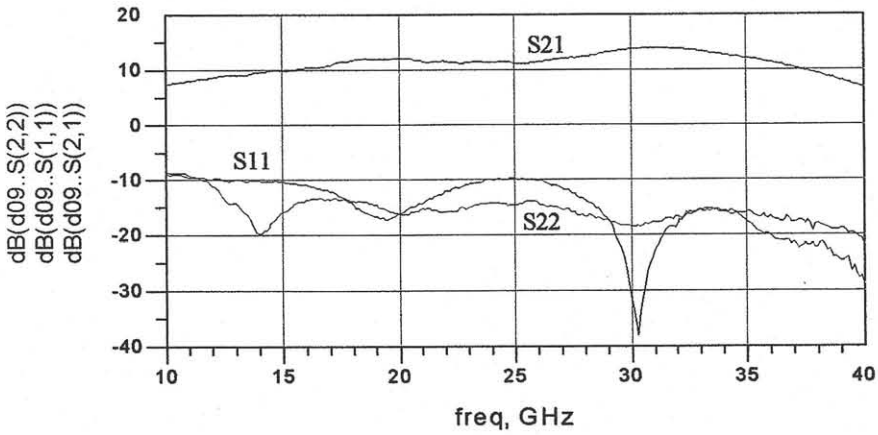

Fig. 3 Small-signal performance of the fabricated MMIC broadband power amplifier

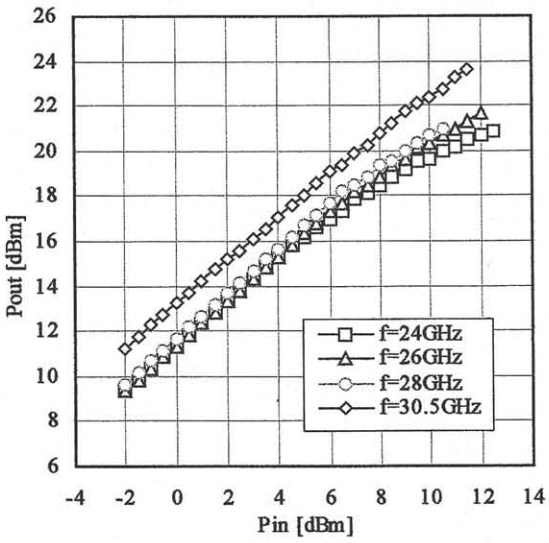

Fig. 4 Output power as a function of input power for various frequencies

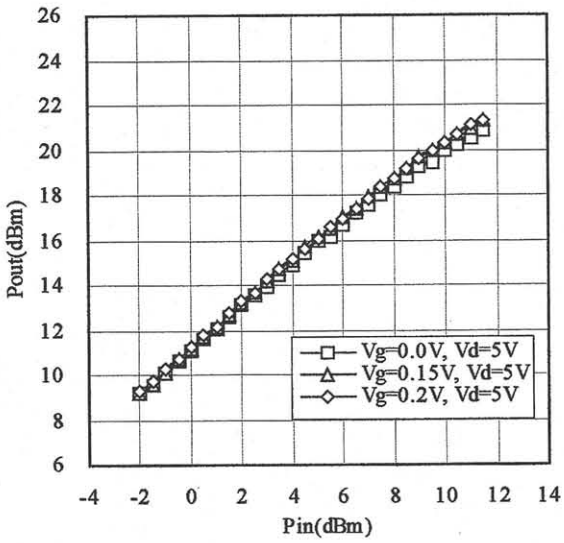

Fig. 5 Output power as a function of input power for various gate bias voltages at 26.5GHz