Extended Abstracts of the 2002 International Conference on Solid State Devices and Materials, Nagoya, 2002, pp. 268-269

D-6-5

The Characteristics of Light Emission by Ballistic Electron Excitation in Nanocrystalline Silicon Device Formed on a p-type Substrate

Yoshiki Nakajima, Hajime Toyama, Akira Kojima and Nobuyoshi Koshida

Department of Electrical and Electronic Engineering, Faculty of Technology
Tokyo University of Agriculture and Technology,
Naka-cho 2-24-16, Koganei-shi, Tokyo 184-8588, Japan
Phone: +81-42-388-7128, Fax: +81-42-385-5395, E-mail: koshida@cc.tuat.ac.jp

1. Introduction

Nanocrystalline porous silicon (nc-PS) diodes operate as surface-emitting ballistic electron sources in vacuum [1,2]. This cold emission is presumably caused by generation of energetic electrons via multiple-tunneling transport through interconnected Si nanocrystallites. As previously reported [3], this effect is applicable to a novel solid-state light emission using ballistic electrons as an excitation source for a deposited fluorescent film without emitting into vacuum [3]. We have demonstrated that nanocrystalline porous poly-Si (nc-PPS) films are available for fabrication of this device [4].

In this work, it is shown that the light emission by ballistic electron excitation can be obtained from the device fabricated on a p-type Si substrate. The fundamental optoelectronic behavior is presented in comparison to that in the case of n-type substrates.

2. Experimental

A nc-PS layer was formed by anodizing a heavily doped (0.01-0.02 Ωcm) single crystalline p-type Si wafer with an ohmic back contact in an ethanoic HF solution (55 wt% HF:ethanol=1:1). The nc-PS layer structure was controlled by periodically modulating anodization current. The anodized nc-PS layer was further treated by rapid thermal oxidation (RTO). The thickness of the nc-PS layer is about 2 μm.

After the anodization, a thin film of organic fluorescent material (Alq_3: tris (8-hydroxyquinoline) aluminum) was deposited onto the nc-PS layer by vacuum evaporation. The thickness of this layer is about 120 nm. Finally, a thin Au film (10 nm thick) was deposited on the Alq_3 film as a top semitransparent electrode. The active area of the device was 5 mm in diameter. The schematic device structure is shown in **Fig. 1**.

The fundamental optoelectronic properties of the prepared device were evaluated under the forward and reverse bias conditions at room temperature in a N_2 gas ambient in terms of the current-voltage (I-V) characteristics, the luminescence intensity, the spatial uniformity of luminescence, and the emission spectrum.

3. Results and Discussion

As shown in **Fig. 2**, the fabricated devices exhibit a rectifying behavior at room temperature. When a sufficient positive bias voltage beyond 20 V is applied to the top electrode with respect to the substrate, a uniform green light emission is observed. No light emission is observed in the negative bias voltage region. At positive voltages higher than 40 V, the luminescence is clearly discernible in the daylight. The uniform luminescence comes from the whole area of a semitransparent Au film without any local bright spots and fluctuations as shown in **Fig. 3**.

According to the results of luminescence spectra measurements, as shown in **Fig. 4**, both the peak wavelength and the bandwidth coincide well with the original photoluminescence (PL) spectrum of Alq_3. The voltage dependencies of both the luminescence intensity and the spectra strongly suggest that the light emission is caused by direct excitation of the fluorescent Alq_3 film by hot or ballistic electrons generated in the nc-PS layer.

We can assume that minority electrons are accelerated in the nc-PS layer toward the outer surface and excite the Alq_3 film in a way similar to the case of n-type substrates. In contrast to that case, however, a hysteresis behavior is seen in the current-voltage and luminescence-voltage characteristics of Fig. 3. This effect suggests that a feedback effect is induced through electron generation by photoexcitation inside the nc-PS layer. It is consistent with the fact that the photoconduction spectra of nc-PS peaks at about 550 nm [5] close to the PL peak wavelength of Alq_3.

4. Conclusions

It has been demonstrated that a solid-state light-emitting device can be fabricated on p-type Si substrates in the same way as previously reported on n-type Si substrates. The visible light emission characteristics support the hypothesis of ballistic electron excitation. An optical feedback effect suggested from a hysteresis behavior is potentially useful for applications to functional silicon optoelectronic devices.

Acknowledgments

This work was partially supported by a Grant-in-Aid from the Ministry of Education, Culture, Sports, Science and Technology of Japan.

References

[1] N. Koshida, X. Sheng, T. Komoda, Appl. Surf. Sci. **146**, 371 (1999).

[2] T. Komoda, X. Sheng, N. Koshida, J. Vac. Sci & Technol. **B17**, 1076 (1999).

[3] Y. Nakajima, A. Kojima and N. Koshida, Mat. Res. Soc. Symp. Proc. **638**, F4.2.1 (2001).

[4] Y. Nakajima, H. Toyama, A. Kojima and N. Koshida, Jpn. J. Appl. Phys. **41**, 2707 (2002).

[5] T. Ozaki, M. Araki, A. Yoshimura, H. Koyama and N. Koshida, J. Appl. Phys. **76**, 1986 (1994).

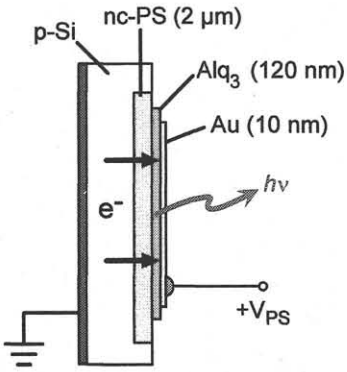

Fig.1. A schematic structure of the fabricated device based on ballistic electron excitation formed on a p-type Si substrate.

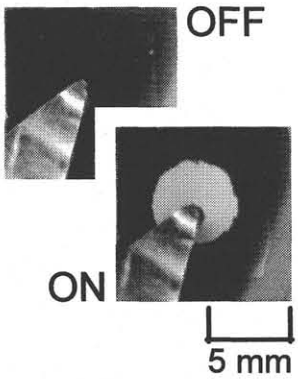

Fig.3. Photograph of the device under the off and on states. At a positive biased condition, uniform light emission is observed.

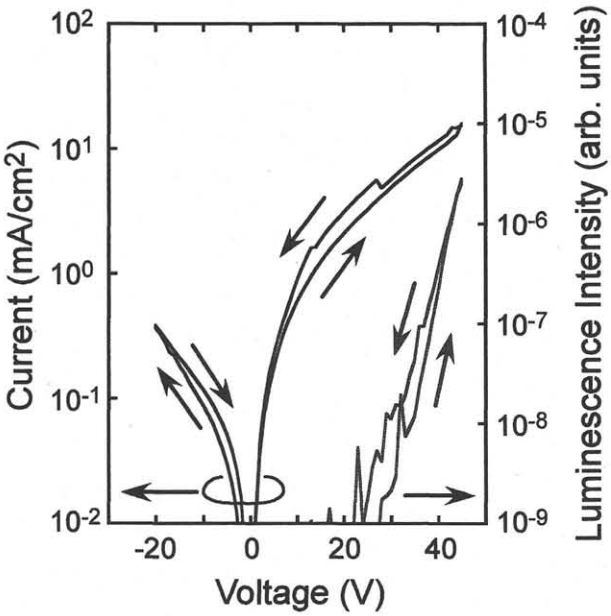

Fig.2. Current-voltage characteristic and the corresponding luminescence intensity of the device.

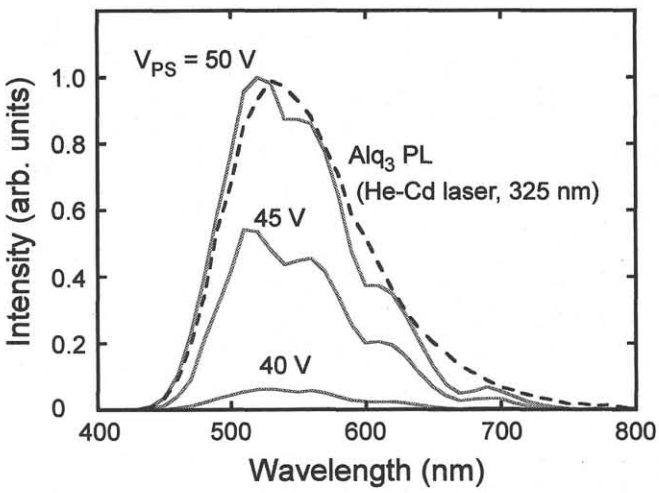

Fig.4. Emission spectrum (the solid curve) of the device. The PL spectrum of a fluorescent film (Alq_3) is also shown (the dashed curve).