Extended Abstracts of the 2003 International Conference on Solid State Devices and Materials, Tokyo, 2003, pp. 910-911

G-8-3

A Low Power SiGe Micromixer for 2.4/5.2/5.7 GHz Multi-band WLAN Applications

C. Y. Wang, H. W. Chiu, H.C. Chen, S. S. Lu, and C. C. Meng[1]

Graduate Institute of Electronics Engineering and Department of Electrical Engineering,
National Taiwan University, Taipei, Taiwan, ROC
Phone: 886-2-23635251 ext. 217 Email: sslu@cc.ee.ntu.edu.tw
[1]Department of Electrical Engineering, National Chiao-Tung University, Hsin-chu, Taiwan, R. O. C.

I. Introduction

Wireless communication has evolved into a world of multi-standards/multi-services with different operating frequencies. Typical design strategies used different receive/transmit paths for different frequency bands. The primary challenge in designing multi-band transceivers is increasing the functionality of such communication systems while minimizing the number of additional hardware such as antennas, filters, low noise amplifiers and mixers. That is, it is desirable to combine two or more standards in one mobile unit. Recently, a large number of efforts have been made to develop concurrent multi-band antennas, filters, low-noise amplifiers. In heterodyne WLAN receivers such as RF2444 or ISL3685, the input impedance of a mixer has to be matched to 50 Ω. Therefore, for 2.4GHz/5.2GHz/5.7GHz multi-band WLAN applications, there is a need of a mixer whose input impedance can be matched to 50 Ω at these frequencies. In this work, an integrated SiGe mixer, which can handle 2.4/5.2/5.7 GHz triple bands, is reported.

II. Circuit design

The schematic of our SiGe multi-band micromxier is depicted in Fig. 1. A single-to-differential stage is constructed with Q5, Q6, Q7 and two resistors, R1 and R2. The common-base-biased Q5 and common-emitter-biased Q7 provide equal but out of phase transconductance gain when Q6 and Q7 are connected as a current mirror. The common base configuration possesses good frequency response while the speed of common-emitter-configured Q7 is improved drastically by adding the low impedance diode-connected Q6 at the input of common-emitter-configured Q7. Thus, the single-to-differential stage in Fig. 1 is very suitable for high frequency operation. The single-to-differential stage not only can turn a single-ended signal into two balanced signals but also facilitate the input RF impedance matching. The resistance looking into point A at RF input in Fig. 1 is equal to the parallel combination of the R1-Q5 branch and the R2-Q6 branch. The resistance looking into the R1-Q5 branch is the sum of R1 (24 Ω) and $1/g_{m5}$ (69Ω), where g_{m5} the transconductance of Q5. The resistance looking into the R2-Q6 branch is the sum of R2 (24 Ω) and $1/g_{m6}$ (69Ω), where g_{m6} the transconductance of Q6. Therefore an input resistance of approximately 50 ohm at point A can be achieved by choosing appropriate biases of Q5, Q6 and Q7. Note that the bias-current source in a conventional Gilbert mixer contributes noise and deteriorates the common mode rejection ratio rapidly at high frequency. In contrast, the single-to-differential input stage in Gilbert micromixer renders good frequency response and eliminates the need for common mode rejection needed in a conventional Gilbert mixer. Current-injection-bias technique is applied in Fig.1 to enhance the conversion gain of the mixer. The single-to-differential technique is also applied in the LO input and a CMOS differential amplifier is used to convert the differential IF signal to single ended signal.

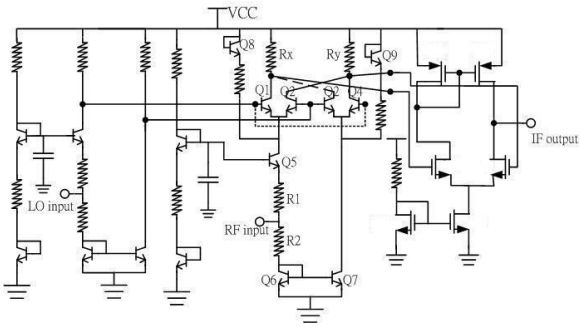

Fig. 1. The schematic of SiGe double balanced Gilbert micromixer.

III. Results and discussions

The micromixer is implemented with 0.8 μm SiGe BiCMOS process. The die photo of the fabricated SiGe micromixer is shown in Fig. 2. On-wafer measurement is performed. The supply voltage is 3.3 V and the whole circuit only consumes a very small dc power of 13.2 mW.

The voltage conversion gain was found to reach a maximum value of 26 dB when the LO power is about

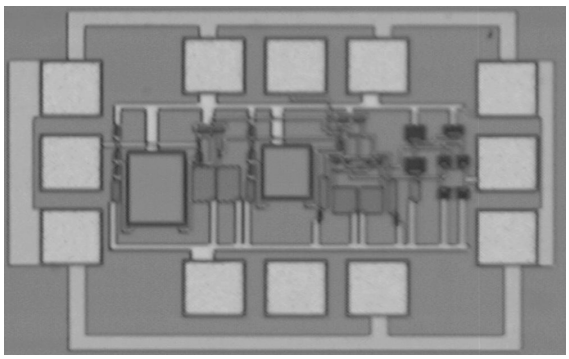

Fig. 2. Die photo of the SiGe

-9 dBm. Therefore the LO power is fixed at this power level for the experimental data described as follows. The measured input return loss ($|S_{11}|$) is below –18 dB from DC to 20 GHz as is evident in Fig. 3, indicating a very wide-band matching characteristic. The characteristics of voltage conversion gain as a function of RF frequency with a fixed IF frequency of 100 MHz and a fixed LO power of –9 dBm are plotted in Fig. 4. The conversion gain is 32, 26 and 25 dB at frequencies of 2.4, 5.2 and 5.7 GHz, respectively. The isolation characteristics of the mixer are shown in Fig.5. The LO-IF isolation is 26, 32 and 30 dB at frequencies of 2.4, 5.2 and 5.7 GHz, respectively. The LO-IF isolation achieved is better than the previous value of 27 dB at 5.7GHz obtained from a conventional Gilbert mixer [1]. The LO-RF isolation is 48, 48 and 47 dB at frequencies of 2.4, 5.2 and 5.7 GHz, respectively. The RF-IF isolation is 25, 28, and 29 dB at frequencies of 2.4, 5.2 and 5.7 GHz, respectively. Clearly isolation characteristics of the micromixer are quite satisfactory.

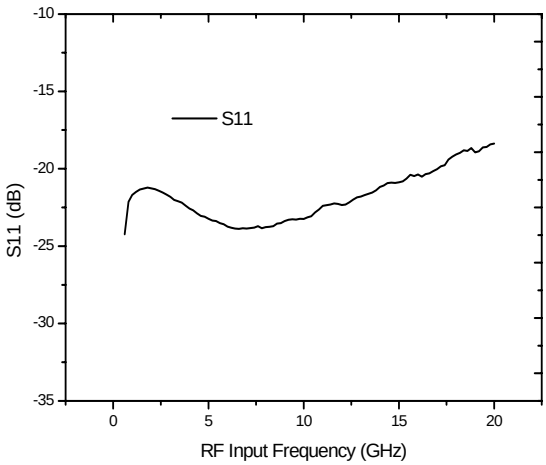

Fig. 3 Input matching characteristics of the SiGe micromixer

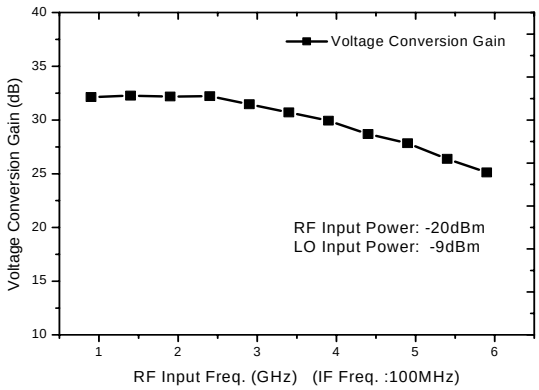

Fig. 4 Voltage conversion gain of the SiGe micromixer as a function of RF frequency

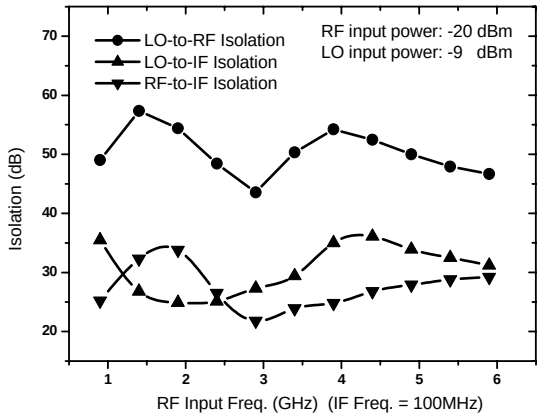

Fig. 5. Isolation characteristics of the SiGe micromixer

VI. Conclusion

Micromixer is demonstrated in SiGe BiCMOS technology for multi-band WLAN. The intrinsic wideband matching charactertics of the micro-mixer make it very suitable for multi-band applications. Conversion gains of 32, 26 and 25 dB at frequencies of 2.4, 5.2 and 5.7 GHz, respectively, are obtained. Good isolation and linearity are also achieved.

Acknowledgement

Financial support from NSC91-2219-E-002-02, 89-E-FA-06-2-4 and 91-EC-17-A-05-S1-0017 are appreciated. The authors are also very grateful for the measurement support from High Frequency Measurement Center of Nano Device Laboratory (NDL).

References

[1] W. Durr, U. Erben, A. Schuppen, H. Dietrich and H. Schumacher, "Low-power low-noise active mixers for 5.7 and 11.2 GHz using commercially available SiGe HBT MMIC technology," Electronics Lett., vol.34, no.21, pp.1994-1996, Oct.1998.