Extended Abstracts of the 2004 International Conference on Solid State Devices and Materials, Tokyo, 2004, pp. 148-149

I-2-3

A Low Noise Amplifier Using Chopper Stabilization for a Neural Sensor LSI

Takeshi Yoshida[1], Takayuki Mashimo[1], Atsushi Iwata[1], Masayuki Yoshida[2] and Kazumasa Uematsu[2]

[1]Graduate School of Advanced Sciences of Matter, Hiroshima University
1-3-1 kagamiyama, Higashi-Hiroshima, Hiroshima 739-8530, Japan
Phone: +81-82-422-7358 E-mail: tyoshida@dsl.hiroshima-u.ac.jp
[2] Graduate School of Biosphere Science, Hiroshima University
1-4-4 kagamiyama, Higashi-Hiroshima, Hiroshima 739-8528, Japan

1. Introduction

CMOS neural sensors have been developed for implantable clinical and physiological applications [1-3]. The neural sensors include a low noise amplifier which is equipped to detect a small signal (a few ten of μV and a few kHz) from a neuron. We have developed a chopper amplifier with low input-equivalent-noise and high input-impedance for single-chip CMOS neural sensor [4]. The aim of this work is to study frequency domain design of the feedback amplifier and post filter, and to evaluate noise characteristics due to process variation.

2. Architecture of low noise amplifier

The schematics of the low noise amplifier using chopper stabilization and 4th-order active low pass filter (LPF) are shown in Fig. 1 and 2, respectively. In the low noise amplifier, the fully-differential Opamps are placed between the first chopper and second chopper. The first chopper modulates the differential input signal at the chopping frequency. The second chopper demodulates the modulated signal with the chopping frequency; and flicker noise and dc noise of the fully-differential Opamps are only modulated by the second chopper. Thus the low-frequency noise, which includes dc and flicker noise, and white noise at the chopper frequency of fully-differential Opamps are converted to a chopper frequency component and low-frequency component of low noise amplifier, respectively. The converted low-frequency noise at the chopping frequency are rapidly attenuated by the 4-th order active LPF. We designed the active LPF with a cut-off frequency of 50 kHz, because the noise at the chopping frequency of 400-kHz are attenuated more than 60-dB. The bandwidth variation of active LPF due to fabrication process degrades the attenuation performance of the noise, therefore the active LPF is equipped with trimming circuits to compensate the characteristics of the bandwidth and voltage gain.

We designed the conventional fully-differential Opamp, and the common mode feedback circuit utilizes continuous time circuit which is shown in Fig. 3. The low-frequency noise of the low noise amplifier depends on the noise of fully-differential Opamp at the chopping frequency, therefore the transistor size of M1~M5 is increased in order to reduce the flicker noise.

The low noise amplifier implemented in the source-followers and the fully-differential Opamps that has to cut the offset voltage of these elements in order to achieve more than 80 dB. In addition, the input signal is modulated by the first chopper at the chopper frequency. Thus we designed the 2-stage feedback amplifier operates as a second-order active band pass filter (BPF) which implemented by feedback capacitors Cf of 37-pF and resistors Rf of 200 kΩ. Figure 4 shows the ac characteristic of 2-stage feedback amplifier, which demonstrates a total gain of about 70 dB, low cut-off frequency of 5-kHz and high cut-off frequency of 1 MHz. The high cut-off frequency is determined by the ac characteristic of the fully-differential Opamp.

3. Experimental results

To evaluate an effect of process deviation, the noise spectral density of the low noise amplifiers without the 4th-order active LPF is plotted in Fig. 5. The 2-stage feedback amplifier has the variation of flicker noise of 90 to 700-nV/root-Hz at a frequency of 1 kHz. On the other hand, the low noise amplifiers operated with a chopper frequency of 400-kHz compresses its noise variation under 5-nV/root-Hz. Because the white noise of the fully-differential Opamp at the chopping frequency is hardly change.

Figure 6 shows the noise spectral density of low noise amplifier with the 4th-order active LPF. The low noise amplifier achieved the equivalent input noise of 6-nV/root-Hz, and a total in-band noise (~50 kHz) of chopper amplifier was 1.3 μV. The active LPF attenuates the noise caused from flicker and process variation by the frequency characteristic of -55-dB/decade, therefore the low noise amplifier can neglect the noise modulated by the chopper frequency.

4. Conclusions

The chopper stabilized low noise amplifier with feedback amplifier and post filter was designed. The low noise amplifier was implemented in the 2-stage feedback amplifier, which operates as the second-order active BPF, and the 4th-order active LPF. The frequency domain analysis showed that the dc and flicker noise of the source-follower and fully-differential Opamp are dramatically reduced. The low noise amplifier achieved the total in-band noise (~50 kHz) of 1.3 μV. The power dissipation is 6-mW at a supply voltage of 3 V.

Acknowledgements

This work was supported by the Japan Society for the Promotion of Science (JSPS), and VLSI Design Education Center (VDEC), the University of Tokyo. The VLSI chip was fabricated in the chip fabrication program of VDEC.

References

[1] K. D. Wise, *Symp. VLSI Circuit Dig.Tech.Papers*, (2002) 106.
[2] Q. Bai et al., IEEE Trans. on Biomedical Eng., **48** (2001) 911.
[3] W. Claes et al., *ISSCC Dig. Tech. Papers*, (2003) 196.
[4] T. Yoshida et al., IEICE Trans. Fund. **E87-A** (2004) 376.

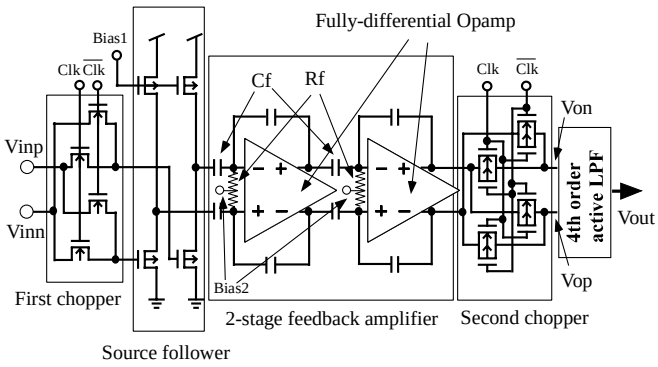

Fig. 1 Proposed low noise amplifier using chopper stabilization for a neural sensor LSI.

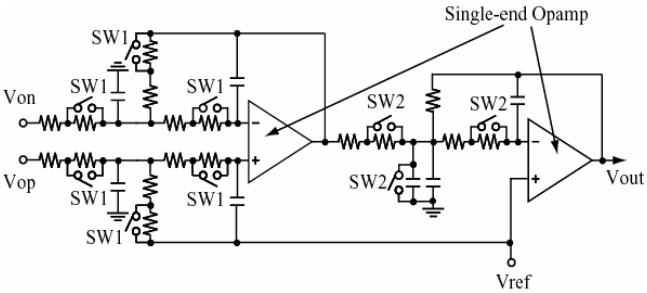

Fig. 2 4th-order active low pass filter.

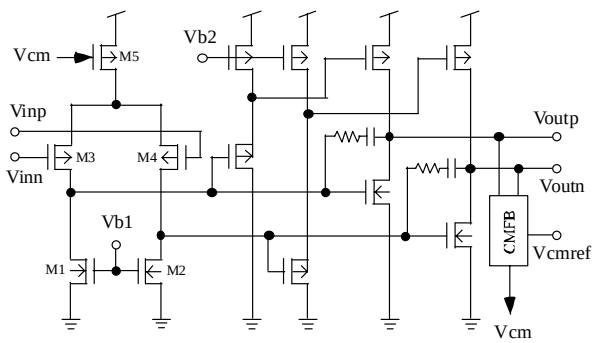

Fig. 3 Fully-differential Opamp.

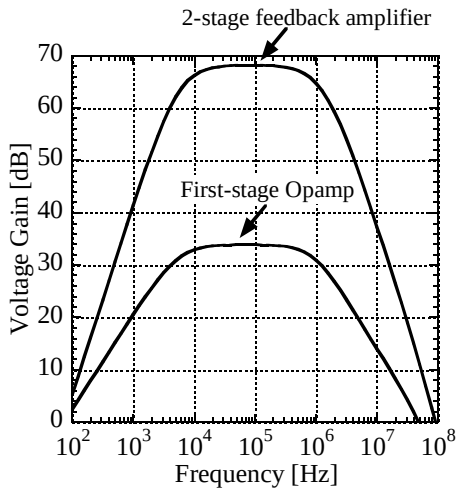

Fig. 4 AC characteristic of 2-stage feedback amplifier in the low noise amplifier.

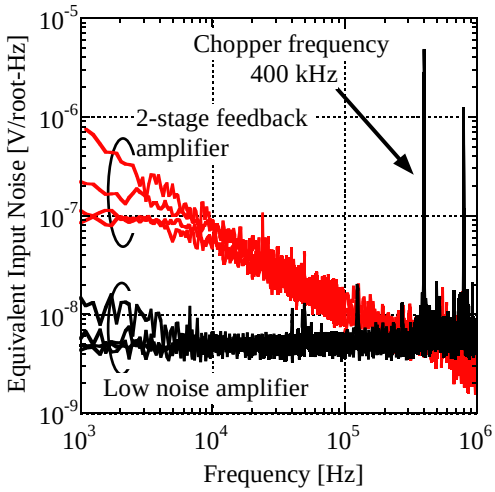

Fig. 5 Deviation of the noise spectral density.

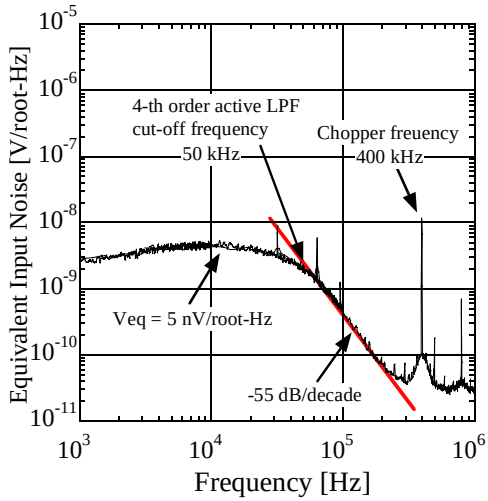

Fig. 6 Noise spectral density of the low noise amplifier.