Extended Abstracts of the 2005 International Conference on Solid State Devices and Materials, Kobe, 2005, pp.304-305

D-5-1

An SOI-CMOS Active Magnetic Probe for High-Frequency Electromagnetic Emissions

Satoshi Aoyama[1], Shoji Kawahito[2], Takeshi Yasui[3] and Masahiro Yamaguchi[3]

[1]Graduate School of Electronic Science and Technology, Shizuoka University
3-5-1 Johoku, Hamamatsu, 432--8011 Japan
Phone: +81-53-478-1341 E-mail: saoyama@idl.rie.shizuoka.ac.jp
[2]Research Institute of Electronics, Shizuoka University
3-5-1 Johoku, Hamamatsu, 432--8011 Japan
[3]Graduate School of Engineering, Tohoku University
6-6-05 Aramaki-aza-Aoba, Sendai 980-8579, Japan

1. Introduction

Integrated Circuits (ICs) are moving towards operation in the Giga-Hz range. The high transition rates, as well as the increased complexity of ICs, lead to high electromagnetic emissions and weak susceptibility. As a result, EMC (Electromagnetic Compatibility) of IC has gained more and more significance. An essential step in identifying the area where the electromagnetic noises are emanating from is to visualize the near field above the ICs and to make a noise mapping. Since the energy in the reactive near field is contained in the near magnetic field, high precision magnetic probe is much coveted. Conventional passive probe using thin-film shielded loop coil obtains high spatial resolution [1], and reduces the effect of the electric field (e-field) by the shield structure [2]. However, the passive probe has a fundamental tradeoff between its sensitivity and spatial resolution. Furthermore, precise measurement with the probe requires much time of its mechanical scanning.

To solve these problems, it is sensible to apply an advanced CMOS technology to develop the probe because it contributes to shrinking devices and integrating active components like amplifiers, as well as configurating an array.

This paper demonstrates, for the first time, the effectiveness of an active magnetic probe with on-chip amplification. It has a feature to distinguish magnetic field (m-field) from the detected electromagnetic emissions, using a 2-turn differential coil structure and a circuit technique of a wideband differential to single-ended converter with the high common mode rejection (CMR). The simulation and the measurement results of the probe are described below.

2. Probe Design

Fig. 1 shows a block diagram and a schematic of the proposed active magnetic probe. A 2-turn differential loop coil picks up small variations in the m-field resulting from the high frequency currents. As shown in Fig.1, the coil is symmetric with respect to V_{com}, at the halfway point of the loop, and it allows to generate differential induced voltages between V_+ and V_-. "2-turn" contributes increasing the sensitivity compared to the conventional shielded loop coil structure [1] [2], and eliminating unwanted e-field without shielding, because capacitively-coupled e-field to the 1st and 2nd turn of the coil is always identical. The coil is fabricated with SOI-CMOS technology using high-resistivity substrate, and this sufficiently reduces the eddy current loss.

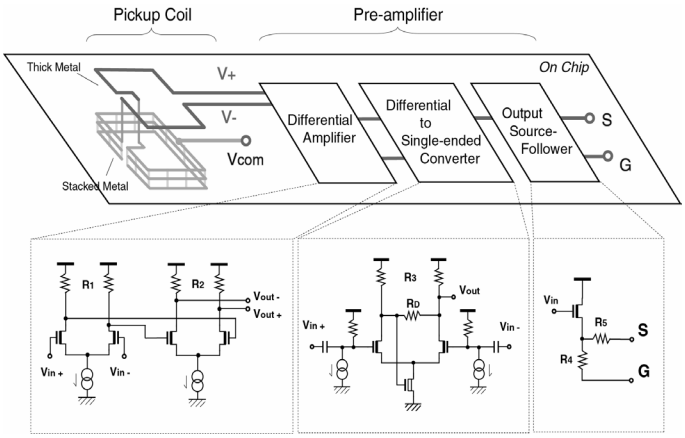

Fig. 1 Block Diagram and Schematic of the Integrated Probe

As shown in Fig.1, the pre-amplifier section consists of three stages: A differential gain amplifier, a differential to single-ended converter and an output source follower. At the first gain stages, a simple differential amplifier with resistance loads is chosen. A 2-stage cascade configuration is applied to achieve a proper gain while minimizing its input parasitic capacitance, considered in the frequency characteristic. The gain stage works to not only amplify the coil signal, but also reject the e-field, which is capacitively -coupled to the coil and corresponds to the common mode noise for differential circuit. Therefore, the CMR is an important characteristic for the stages. The probe output is generally connected to an instrument through a coaxial cable, and analyzed there. In order to match the measurement system, the second stage converts differential signal to single-ended one. The differential amplifier with common-mode feedback and resistive load makes the conversion and brings a good CMR while maintaining high bandwidth. In other words, the e-field can be rejected at this stage as well. As the output buffer, a source follower is used at the final stage, so as to match the system impedance.

3. Simulation Results

An integrated active magnetic probe has been designed and simulated with HSPICE in a 0.15μm SOI-CMOS technology. As can be seen in Fig.2, it achieves a DC gain of 18.5dB and the gain bandwidth product of 12.6GHz, respectively. The CMR keeps over 50dB till 1GHz. Considered an applicable frequency range for practical probes (up to 3GHz), the result is better than that of the passive probe with a 600μm x 600μm shielded loop coil using thin-film technology, which is about 30dB [2].

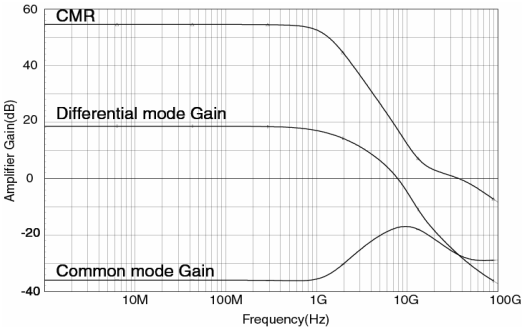

Fig. 2 Frequency Response of the probe (Simulation)

4. Measurement Results

The active probe and the conventional passive probe (shielded loop coil) have been fabricated in 0.15μm five metal (4M+Thick Metal) SOI-CMOS process. Both probes have a loop coil whose size is 200μm x 200μm square. A chip layout of the probes is shown in Fig.3. Fig.4 shows the test setup used to measure the frequency response of these probes. The testing probe is placed above the 50Ω- terminated microstrip line which generates the magnetic field, and set the loop aperture of the coil to be subjected to the magnetic field along the width direction of the line, so that induced voltage at the coil should be maximized. Fig.5 shows the measured gain of both the active and passive probes. The output curve of the active probe is stable and flat till 1.3GHz, as seen in the simulation result (Fig.2), whereas the passive prove outputs a fluctuated curve. The output signal from the passive probe is so small that it may be interfered by stray loops in the measurement system, such as the bonding wire connecting between the transmission line and the probe chip. The effective active probe gain is measured about 20dB against the passive probe at 500MHz. The dashed line in Fig.5 shows the output of the active probe when the microstrip line is opened. The output differences between the 50Ω-terminated and opened microstrip line is also measured about 20dB, which indicates that the induced voltage by the e-field can be reduced by the active probe.

4. Conclusions

A novel magnetic probe has been designed and fabricated. The probe has a 2-turn differential coil and a pre-amplifier on a single-chip, in order to achieve high sensitivity, spatial resolution, and e-field suppression. Measurement results show that the active probe obtains sufficient gain up to 1.3GHz, and at least 20dB e-field suppression.

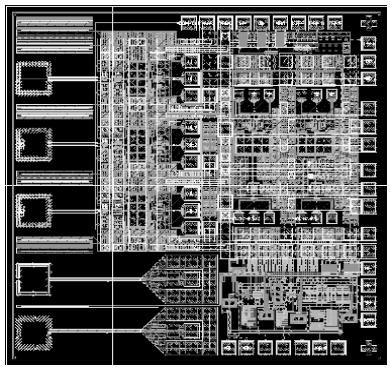

Fig. 3 Layout of the integrated probes

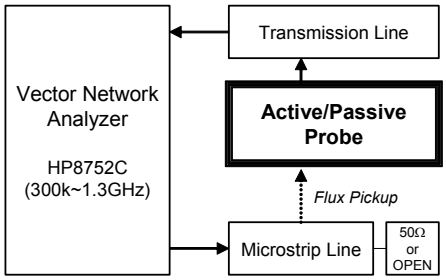

Fig. 4 Test Setup

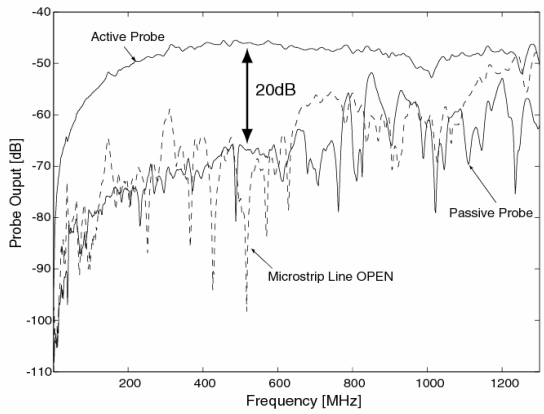

Fig. 5 Measured Frequency Response of the probes

Acknowledgements

This present work was partially supported by the Ministry of Education, Culture, Sports, Science and Technology under the 21st Century COE Program on "Nanovision Science".

The VLSI chip in this work has been fabricated in the chip fabrication program of VLSI Design and Education Center (VDEC), the University of Tokyo in collaboration with Oki Electric Industry Co., Ltd..

References

[1] M.Yamaguchi, et al, *Ext. Abst. 1999 Int. Conf. on Solid State Devices and Materials* (1999) 594

[2] N.Tamaki, et al, *Trans. IEICE*, vol.J87C3,335-342, Mar. 2004