Extended Abstracts of the 2007 International Conference on Solid State Devices and Materials, Tsukuba, 2007, pp. 962-963

D-9-3

CMOS Optical Polarization Analyzer Chip for µTAS

Takashi Tokuda, Sho Sato, Masahiro Nunoshita, and Jun Ohta

Graduate School of Materials Science, Nara Institute of Science and Technology
8916-5 Takayama, Ikoma, Nara 630-0192, Japan
Phone: +81-743-72-6054 E-mail: tokuda@ms.naist.jp

1. Introduction

µTAS (micro total analysis system) technologies on various chemical and bio-analytical applications are expected to be powerful solution to reduce amount of reactants, cost, time for analysis, footprint of measurement system. To enhance the merits of µTAS approaches, *in situ* observations of the reactants will be effective. In this work, we propose a novel CMOS sensor which was designed with a target application of *in situ* monitoring of µTASs such as microchamber or microfluidic systems. As the first sensor device for µTAS, we designed a CMOS photo sensor array chip which can measure optical polarization. A micro-structured metal grid polarizer is configured on light sensing pixels. We successfully demonstrated the polarization measurement function of the fabricated sensor without any off-chip polarizer.

2. Design of the CMOS Optical Polarization Analyzer

Fig. 1 shows the concept of integrating CMOS sensors chip onto µTAS device. The sensor system can be used to obtain detailed information of the target system such as production yield, conductivity, electrochemical profile, etc. It will help us to control the system parameters such as flow speed, temperature, optical excitation, etc. Based on the concept, we designed a CMOS sensor chip with optical polarization sensing function.

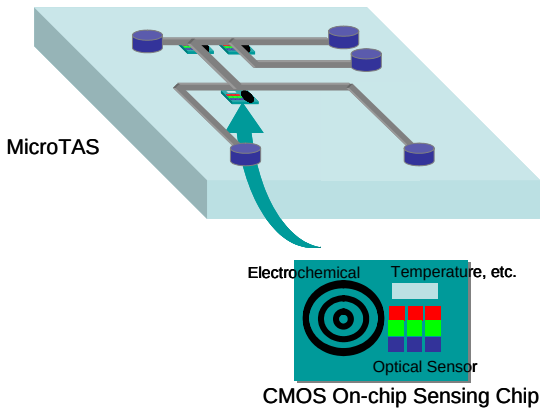

Fig.1 Concept of sensor integration onto µTAS.

Fig. 2 shows a micrograph of the fabricated sensor. Specifications of the sensor chip are summarized in Table I. Fig. 3 shows (a) Schematic and (b) cross sectional structure of the optical polarization sensor, and (c) layout of the on-chip metal grid layer. The light sensing circuit has a configuration of commonly-used light sensing circuitry called as "active pixel sensor" [1]. The polarization detection with on-chip polarizer is based on an idea proposed by Andreou *et al.* [2]. The main feature of the present sensor is a monolithically embedded metal grid structure. The metal grids were configured with top wiring layer of CMOS LSI (metal 4 layer, in the present fabrication technology).

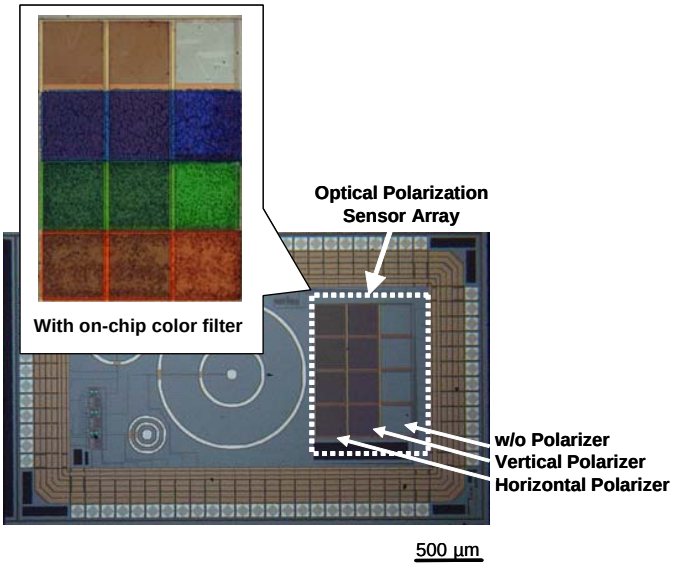

Fig. 2 Layout of the fabricated sensor.

TABLE I. Specifications of the CMOS microsensor chip.

Technology	0.35µm 2-poly 4-metals Standard CMOS
Chip Size	3080 µm x 1880 µm
Optical Sensor	200µm x 200µm, 3 x 4 array
Metal Grid Polarizer	0.5 µm / 0.45µm line / space (0.95µm pitch)
Operation Voltage	3.3 V
Operational Amplifier	PMOS input 2-stage differential (single-end output)
Signal Output	Analog Voltage

3. Characteristics of the fabricated sensor

In the light sensing pixel array, three optical sensors (without grid, with a horizontal grid, and with a vertical grid) were designed as one measurement unit. And the sensor chip has four sets of the polarization sensing unit (see Fig. 2). The four sets of the optical analysis pixels were used with on-chip color filters such as; red, green, blue, and w/o filters (see inset of Fig. 2).

Owing to this multi-sensor configuration, the optical polarization measurement can be performed with high reliability. Fig. 4 shows typical result of the polarization measurement. The fabricated sensor was illuminated with

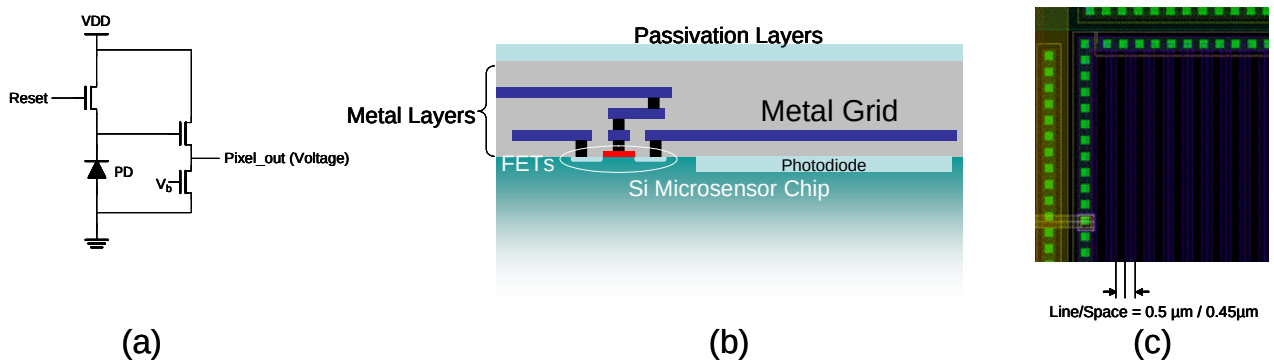

Fig. 3 (a) Schematic and (b) cross section of the optical polarization sensor, and (c) layout of the on-chip metal grid layer.

polarized light generated by LED with Glan-Thompson prism. Two traces shown in Fig. 4 are light intensities measured by the active pixel sensors with vertical and horizontal metal grids. The intensities are normalized by that measured by the sensor pixel without any grid structure. Polarization distribution of the incident light can be canceled and the polarization angle (angle of then Glan-Thompson prism) was accurately measured. This feature means that we can design simple measurement systems with incompletely depolarized light source such as LED-based light sources.

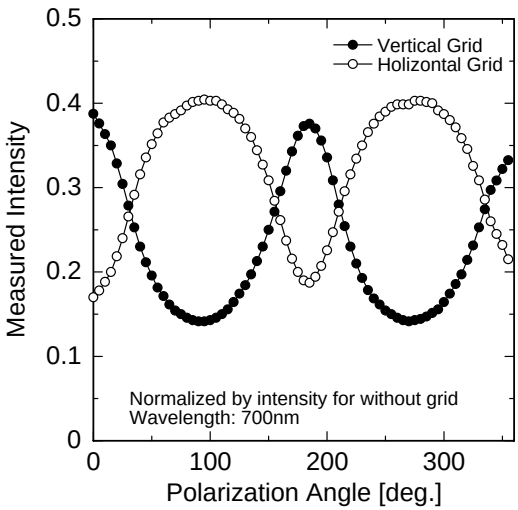

Fig. 4 Results of polarization measurement using the fabricated CMOS sensor.

Fig. 5 shows rejection ratio of polarization analysis function. The rejection ratio of the on-chip grid polarizer is as small as 1-3, and not as good as off-chip polarizer such as metal grid polarizer or Polaroid film. However, the multi-pixel measurement scheme with orthogonal polarizer enables to separate signals corresponding to polarized and cross-talking light.

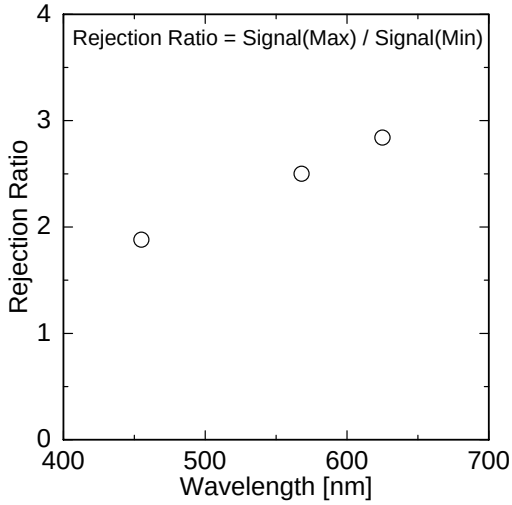

Fig. 5 Wavelength dependence of rejection ratio.

4. Conclusions

A novel CMOS sensor which can measure optical polarization was proposed and fabricated. Owing to monolithically embedded metal grid structure, the proposed function was successfully demonstrated. Multi-pixel measurement scheme played an essential role for the accurate polarization measurement. The present sensor will be implemented onto microchamber and further characterization will be carried out.

Acknowledgement

This study was supported in part by Grants-in-Aid #18681024 from the Ministry of Education, Science, Sports and Culture.

REFERENCES:

[1] E. R. Fossum, Proc. SPIE, **1900** (1993) 2-14.

[2] A. G. Andreou, and Z. K. Kalayjian, IEEE Sensors Journal, **2** (2002) 566.

[3] T. Tokuda, K. Tanaka, M. Matsuo, K. Kagawa, M. Nunoshita, J. Ohta, Sensors & Actuators: A, in press.