Extended Abstracts of the 2007 International Conference on Solid State Devices and Materials, Tsukuba, 2007, pp. 518-519

P-6-7

60 GHz LNA Module Using Low Temperature Co-fired Ceramic Technology

Woojin Chang, Dong-Young Kim, Haechoen Kim and Hyun-Kyu Yu

Microwave IC Group, ETRI

161 Gajeong-dong, Yuseong-gu, Daejeon, Korea

E-mail: wjchang@etri.re.kr, Tel.: +82-42-860-1270, Fax: +82-860-6183

Abstract

This paper presents a 60 GHz low noise amplifier (LNA) module using a low temperature co-fired ceramic (LTCC) technology. The 60 GHz-band LNA microwave monolithic integrated circuit (MMIC) has been designed the single ended and 4-staged structure and fabricated using 0.12 ㎛ GaAs pseudomorphic high electron mobility transistor (PHEMT) process. The performance of the fabricated LNA MMIC has the gain of 19 ~ 20 dB, the input reflection coefficient of -15 ~ -12 dB and the output reflection coefficient of -7 ~ -6 dB at 59.5 ~ 60.5 GHz. And the fabricated 60 GHz LNA module using the LTCC technology was measured the S_{21} of 20 ~ 21 dB, the gain-flatness of 1 dB, the S_{11} of -12 ~ -7 dB and the S_{22} of -6 ~ -5 dB for 59.5 ~ 60.5 GHz. The S_{21}, the S_{11} and the S_{22} of the module are increased about 1 dB, 3 ~ 5 dB and 1 dB, respectively, compared with the bare chip. This indicates that the LTCC is suitable solution for 60 GHz-band package.

I. 60 GHz LNA MMIC

The 60 GHz LNA MMIC has been designed using 0.12 ㎛ GaAs PHEMT 4-inch process [1]. The stability [2] and the yield of the amplifier MMIC with the microstrip coupled lines for DC blocks and RF matching elements are more improved than those with the MIM capacitors. And the microstrip coupled lines in all interstages act on the DC blocks and the RF matching elements. Figure 1 shows the microscopic view of the designed and fabricated LNA MMIC. The chip size of the amplifier MMIC has been 3.8 × 1.6 mm^2. The fabricated 60 GHz LNA MMIC was measured the small signal gain (S_{21}) of 19 ~ 20 dB, the gain-flatness of 1 dB, the input reflection coefficient (S_{11}) of -15 ~ -12 dB and the output reflection coefficient (S_{22}) of -7 ~ -6 dB for 59.5 ~ 60.5 GHz as shown in Fig. 2. The amplifier has noise figure of 4.7 ~ 5.2 dB for 59.5 ~ 60.5 GHz as shown in Fig. 3.

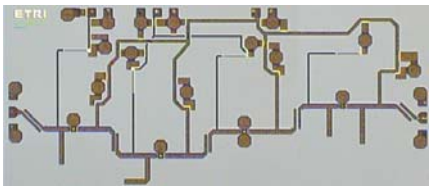

Fig. 1. The fabricated 60 GHz LNA MMIC.

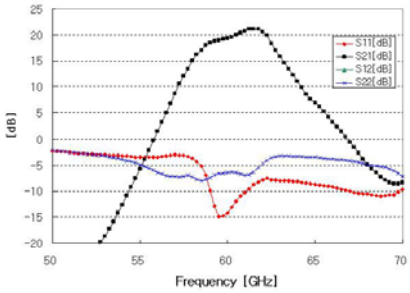

Fig. 2. S-parameter of the fabricated LNA MMIC.

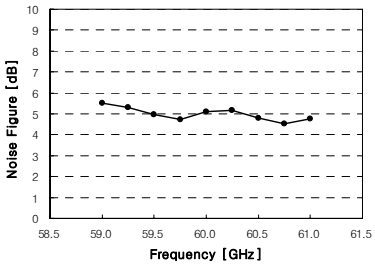

Fig. 3. Noise Figure of the fabricated LNA MMIC.

II. 60 GHz LNA LTCC module

The Ferro A6S^{TM} LTCC green sheet was chosen because it has a low loss tangent (<0.002 up to 100 GHz), a low dielectric constant (5~6 for DC ~ 60 GHz). The low loss tangent and the low dielectric constant produce the low loss of transmission line on the substrate. In the fabrication process, the via-holes were filled with silver and the ground plane and the transmission lines were also printed with the same conductor to reduce the conductor loss.

The width of signal line and the gap between signal line and ground planes were designed to be 70 ㎛ and 80 ㎛.

For measuring loss from ribbon bonding, we implemented the 3 mm thru-line and the interconnected 3 mm line with ribbon bonding on the substrate made of a green sheet thickness of 100 ㎛ after co-firing. Interconnection length is 200 ㎛ and the size of ribbon used for bonding is 2 x 0.5 mil^2. The S-parameters of the thru-line and the interconnected line with ribbon bonding were measured for 50 ~ 70 GHz. The insertion losses of the thru-line and the interconnected line were -0.2 dB and -0.3 dB at 60 GHz, respectively [3].

The LNA chip and the one layer of LTCC after co-firing have the thickness of about 100 ㎛. For shortening length of ribbon-bonding between bonding pads of the LNA chip and the LTCC, the module has a cavity structure and the LNA chip is mounted in the cavity formed on the top layer of 7-layer LTCC substrate. And the length between the bonding pads of the LNA chip and the CPW line on the LTCC substrate is about 200 ㎛. Figure 4 shows photograph of the fabricated LNA module using the Ferro A6S™ LTCC. The transformer on the LTCC substrate was designed for improving the performance of the module. The module size is 8 mm x 6 mm.

Figure 5 shows the measured scattering parameters for LTCC module for 50 ~ 70 GHz. The fabricated 60 GHz LNA module was measured the S_{21} of 20 ~ 21 dB, the gain-flatness of 1 dB, the S_{11} of -12 ~ -7 dB and the S_{22} of -6 ~ -5 dB for 59.5 ~ 60.5 GHz. The S_{21}, the S_{11} and the S_{22} of the module are increased about 1 dB, 3 ~ 5 dB and 1 dB, respectively, compared with the bare chip. This indicates that the LTCC is suitable solution for 60 GHz-band package.

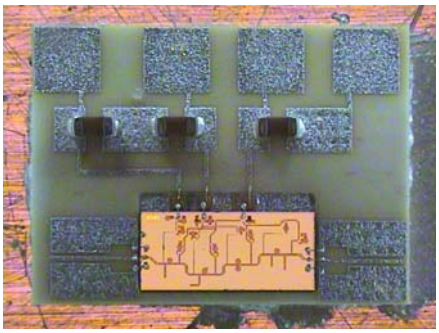

Fig. 4. The implemented 60 GHz LNA LTCC module.

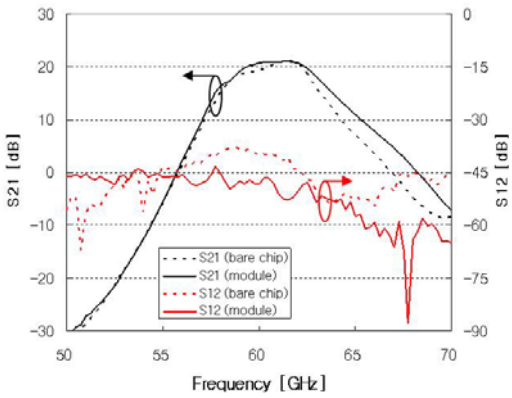

(a) S_{21} and S_{12}

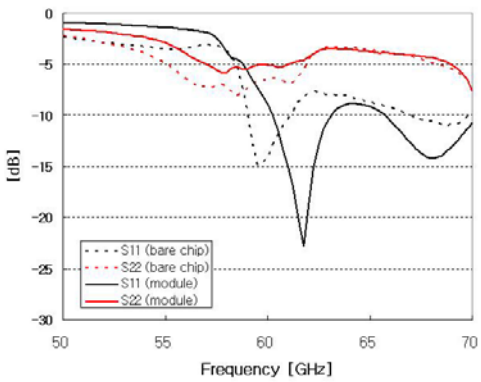

(b) S_{11} and S_{22}

Fig. 5. S-parameter of the 60 GHz LNA LTCC module.

III. Conclusion

This paper presents a 60 GHz LNA module using the LTCC technology. The 60 GHz-band LNA MMIC has been designed the single ended and 4-staged structure and fabricated using 0.12 ㎛ GaAs PHEMT 4-inch process. The performance of the fabricated LNA MMIC has the gain of 19 ~ 20 dB, the input reflection coefficient of -15 ~ -12 dB and the output reflection coefficient of -7 ~ -6 dB at 59.5 ~ 60.5 GHz. In the LTCC module, the length between the bonding pads of the LNA chip and the CPW line on the LTCC substrate is about 200 ㎛. And the insertion loss of the ribbon bonding was 0.1 dB in case of the interconnected length of 200 ㎛. The fabricated 60 GHz LNA module using the LTCC technology was measured the S_{21} of 20 ~ 21 dB, the gain-flatness of 1 dB, the S_{11} of -12 ~ -7 dB and the S_{22} of -6 ~ -5 dB for 59.5 ~ 60.5 GHz. The S_{21}, the S_{11} and the S_{22} of the module are increased about 1 dB, 3 ~ 5 dB and 1 dB, respectively, compared with the bare chip. This indicates that the LTCC is suitable solution for 60 GHz-band package.

IV. References

[1] Jong-Won Lim, Ho-Kyun Ahn, Hong-Gu Ji, Woo-Jin Chang, Jae-Kyoung Mun and Haecheon Kim, Jpn. J. Appl. Phys. **43** (2004) 7934.

[2] David M. Pozar, *Microwave Engineering* (1998) 614.

[3] Dong-Young Kim, Jae Kyoung Mun, Dong-Suk Jun and Haecheon Kim, *Abstract of the Materials Related Society 2006 Fall Meeting* (2006) 644.