Extended Abstracts of the 2008 International Conference on Solid State Devices and Materials, Tsukuba, 2008, pp. 314-315

G-3-5

Low-Capacitance Low-Voltage Transient Voltage Suppression Circuit by Diode activated SiGe HBT in SiGe HBT BiCMOS Process

Sheng-Huei Dai, Jeng-Jie Peng, Chia-Cheng Chen, Chrong-Jung Lin, and Ya-Chin King

Microelectronics Laboratory, Semiconductor Technology Application Research (STAR) Group,
Institute of Electronics Engineering, National Tsing-Hua University, Hsin-Chu 300, Taiwan
Phone/Fax: +886-3-5715131-34034 / +886-3-5721804, E-mail: shdai@well.ee.nthu.edu.tw

1. Introduction

Transient Voltage Suppressor (TVS) is generally an off-chip device, which is designed for protecting integrated circuits against electrostatic discharge (ESD) and electrical overstress (EOS). Reverse biased PN junctions are the most common structure used in TVS devices because of its fast response time, low leakage under standoff voltage, and sharp I-V transition after breakdown [1]. The breakdown voltage of TVS devices generally ranges from 5V to 450V [1]. As the supply voltage of ICs decreases with the progress of CMOS technology, the breakdown voltage of corresponding TVS devices must be lowered to provide adequate protection. As shown in Fig.1, the conventional TVS devices encounter two problems: the large leakage and the high capacitance of the diode based TVS devices with low breakdown voltage [2]-[3]. Hence, fundamental modification is needed for low-voltage low-capacitance TVS devices.

2. On-Chip Protection Circuit in SiGe BiCMOS Process

The SiGe HBT has benefits of high conductance and high currant gain, which are desirable features for high frequency operations [4]. Base floated SiGe HBT, on the other hand, is usually used for ESD protection [5]. The typical I-V characteristics are shown in Fig. 6. Although the trigger point of based floated SiGe BJT is much lower than the conventional BJT because of its high current gain [5], the 7.5V trigger point is still too high for ESD or TVS application of the advanced CMOS circuits with supply voltage below 1.8V.

In order to protect the core devices in advanced IC, low-voltage protection devices are needed. As shown in Fig. 2, the combination of SiGe HBT and a diode with low breakdown voltage is proposed in this work for low-voltage low-capacitance device. The capacitors in the combination protection circuit are shown in Fig. 3. The low V_{BR} diode can be achieved by N+/P+ junction with the source/drain implantation in CMOS technology. Since the doping concentration of source/drain is usually as high as 10^{20} cm^{-3}, the junction capacitance of the low V_{BR} diode is very high while the both CB and EB junction of the BJT have small capacitance because of the lightly doped base and collector [3]. Hence, the overall capacitance of the combined protection device is predominantly determined by the smallest capacitances between the CB and EB junction in series.

3. Circuit Layout

Fig. 4 illustrates the cross-sectional view of the new protection device realized in commercially available SiGe BiCMOS process. The low V_{BR} diode achieved by N+/P+ junction is isolated by the n-well to prevent interference with peripheral circuits. The RPO layer is used for blocking the silicide formation on the N+/P+ junction. The N+ region is connected to the VDD while the P+ region is connected to the base of SiGe HBT by metal layer.

Fig. 5 shows the layout of the combination protection circuit. The SiGe HBT is a 4 finger structure with 20.3μm long and 0.9μm wide emitter fingers. The effective emitter length is 166μm. In order to ensure the activation of the SiGe HBT, the length of the V_{BR} diode has to be carefully designed, while minimizing the overall capacitance. The N+/P+ junction length of the low V_{BR} diode is chosen to be 10μm, which is about 1/16 as the emitter length of SiGe HBT.

4. Measurement Results and Discussions

The I-V characteristics of base floated SiGe HBT, low V_{BR} diode, and combination protection circuit is shown in Fig. 6. The low V_{BR} diode with N+/P+ junction has an extremely low breakdown voltage of about 1.5V. This result demonstrates that the concept of combination protection circuit exhibit a similar breakdown behavior as that of the low V_{BR} diode. It effectively reduces the trigger point of base floated SiGe HBT from 7.5V to a much lower value. In addition, due to the high conductance of SiGe HBT, this new circuit can have much higher current handling capability. At 3V bias, the current density of low V_{BR} diode is about 89.51μA/μm, while the current density of combination protection circuit can be pushed to 235.48 μA/μm, which is about 2.6 times higher.

Table 1 lists the capacitances of low V_{BR} diode and combination protection circuit. For the same device length, the capacitance of the combination protection circuit is 10 times smaller than that of the conventional low V_{BR} diode.

The current amplification effect by the SiGe HBT is demonstrated in Fig. 7. In order to fully take advantage of the high current gain of the SiGe HBT, the HBT has to operate under forward active region. This forward active condition can be achieved by optimizing the ratio of the junction width of low V_{BR} diode and the emitter length of SiGe HBT.

The relationship between the capacitance and the reverse biased voltage are shown in Fig. 8. The combination circuit has much lower capacitance than low V_{BR} diode.

As the simulation result shown in Fig. 9, various circuit with different breakdown point can be easily realized by modifying the layout distances between the N+ and P+ region for TVS applications of a wide voltage range.

The transmission line pulse (TLP) measurement results are shown in Fig. 10. The diode-activated SiGe HBT can sustain higher current under lower voltage than the low V_{BR} diode.

5. Conclusion

By the combining a low V_{BR} diode and SiGe HBT, low voltage and low capacitance protection circuit can be achieved simultaneously. Compared with the base floated SiGe HBT, the combination protection circuit has no snapback in I-V

characteristics. Without the high trigger point, the combination protection circuit by diode activated SiGe HBT can effectively protect the delicate ICs against ESD and EOS.

Acknowledgements

The authors would like thank the National Chip Implantation Center (CIC) for their support on this study.

References

[1] Vasile V.N. Obreja: Proc. Int. Semiconductor Conference (CAS'99), p. 278.

[2] B. Jayant Baliga: *Power Semiconductor Devices* (PWS Publishing Company, Boston, MA, 1996), p. 82

[3] Yuan Taur and Tak H. Ning: *Fundamentals of Modern VLSI Devices* (Cambridge University Press, UK, 1998), p. 34, p. 94, p. 295, p. 364

[4] John D. Cressler: IEEE Trans. Microwave Theory Tech. **46** (1998) No.5

[5] Steven H. Voldman: *ESD Physics and Devices* (John Wiley & Sons, UK, 2004), p. 344

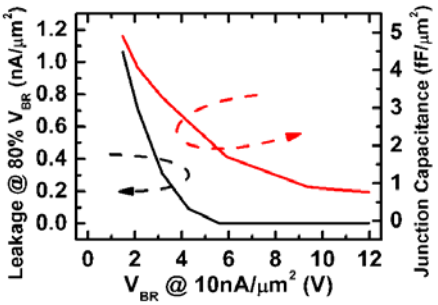

Fig. 1 Simulated diode leakage current under 80% breakdown voltage and junction capacitance under 0V bias versus breakdown voltage

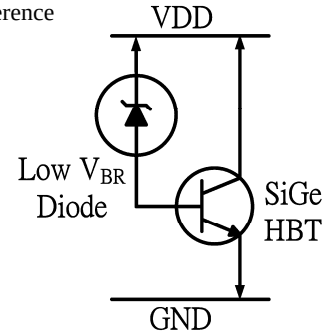

Fig. 2 Combination protection circuit of SiGe HBT and a diode with low breakdown voltage

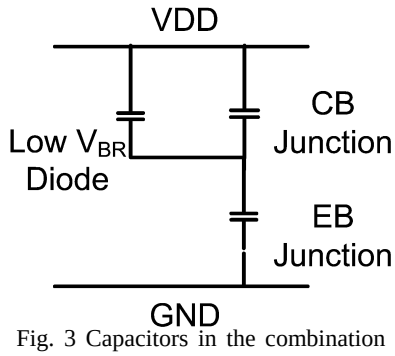

Fig. 3 Capacitors in the combination protection circuit

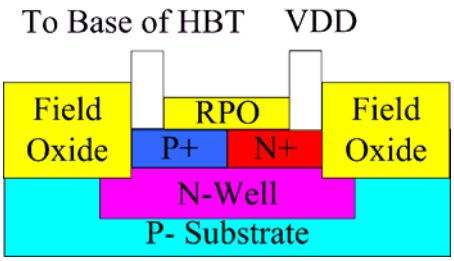

Fig. 4 Schematic layout of low V_{BR} diode in CMOS Process

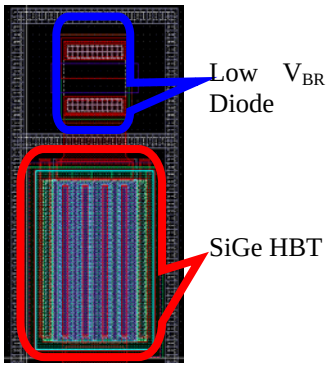

Fig. 5 Layout of combination protection circuit

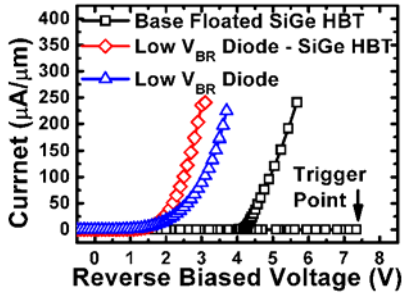

Fig. 6 I-V characteristics of base floated SiGe HBT, low VBR Diode, and low VBR diode-SiGe HBT combination protection circuit

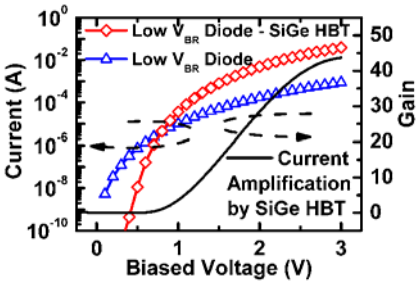

Fig. 7 Current amplification of low V_{BR} diode with 10μm junction width by SiGe HBT with 166μm emitter length

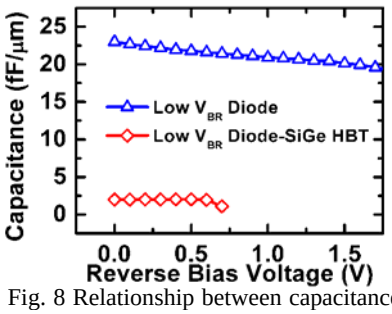

Fig. 8 Relationship between capacitance

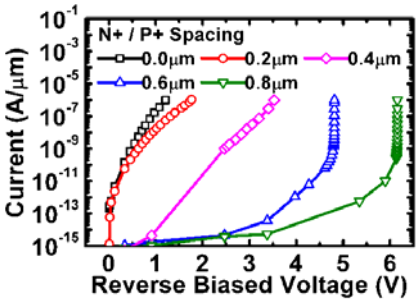

Fig. 9 Simulated breakdown characteristics of low V_{BR} diodes with separated N+/P+

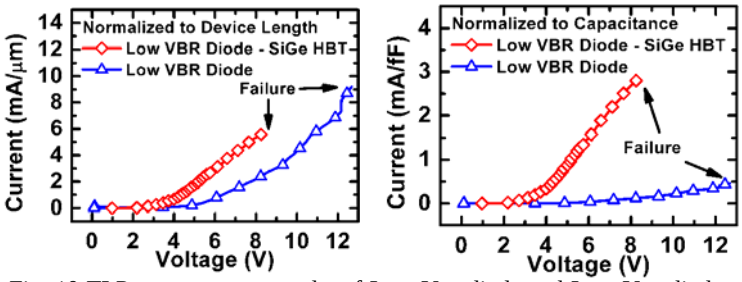

Fig. 10 TLP measurement results of Low V_{BR} diode and Low V_{BR} diode activated SiGe HBT combination circuit

Table 1 Parameters of low V_{BR} diode and low V_{BR} diode activated SiGe HBT combination circuit

Device	Low V_{BR} Diode	Low V_{BR} Diode –SiGe HBT
Device Length	10μm (N+/P+)	166μm (Emitter)
Cap.@1MHz,0V	200 fF	330 fF
Cap./μm@1MHz,0V	20 fF/μm	1.98 fF/μm