Extended Abstracts of the 2009 International Conference on Solid State Devices and Materials, Sendai, 2009, pp820-821

Substantial Reduction of Power Loss in a 14kVA SiC-Inverter

Shuhei Nakata, Shinichi Kinouchi, Tetsuya Kitamura, Hiroaki Sumitani, Masayuki Imaizumi, Tetsuya Takami,Takeshi Oi, and Tatsuo Oomori

Mitsubishi Electric Co., Advanced Technology R&D Center.
8-1-1, Tukaguchi Honmachi, Amagasaki, Hyogo 661-8661, Japan
Phone: +81-63-6497-7096 E-mail: Nakata.Shuhei@cj.mitsubishielectric.co.jp

1. Introduction

Silicon carbide (SiC) power devices are expected to have an enormous impact on power electronics technology when applied to power conversion system (inverter, etc.) for its higher power conversion efficiency, higher current density and higher operating temperature due to its intrinsic properties.

We had developed and successfully tested 3.7kW SiC inverter which consists of SiC-MOSFETs and SiC Schottky Barrier Diodes (SBDs) [1].

Moreover for higher power application, we had developed a prototype module with paralleled SiC-MOSFETs and SiC-SBDs and successfully tested 10kW output power and verified 70% power loss reduction compared with the conventinal power module [2].

In this paper, we present the experimental results of the fabricated 14kVA inverter using high rated current SiC devices and the substantial power loss reduction of the inverter.

2. Experiments and results

Fabricated inverter

The fabricated power module of the inverter uses six switches (MOSFETs) and free wheeling diodes (SBDs) and the rating is 14kVA. The module has same outer shape and connector layout with the Si-IGBT power module of the conventinal inverter. The inverter has functions of converter, inverter and break.

The layout of the SiC devices in the power module is shown in Fig. 1. We use Si-diodes for converter and SiC devices for inverter and break.

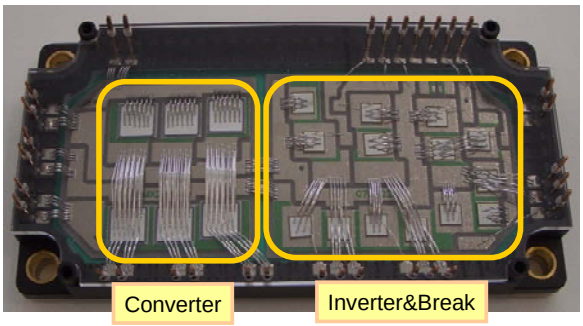

Fig.1 The view graph of layout of the SiC devices in the fabricated power module.

The SiC devices used in this converter have power rating of 1200V and 60A.

The fabricated module is placed on the fin of stainless steel equipped with a fan.

The paralleled capacitors of 2mF, which is the same value with the conventinal inverter, are mounted transversely beside the fin in order to enhance the natural convection cooling of capacitors.

Figure 2 shows the view graph of the fabricated SiC inverter (right side) and the conventinal Si inverter (left side). Thanks to the reduced power loss of the SiC power module and the layout of the capacitors, the volume of the inverter is minimized to 1-litter which is one-forth of the conventinal inverter.

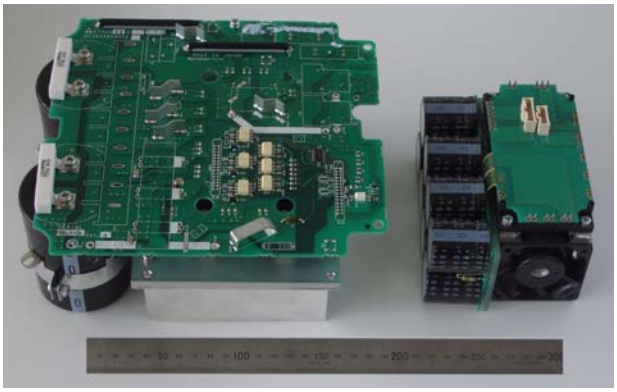

Fig.2 The view graph of the fabricated inverter (right side) and the conventinal inverter (left side).

Power module characteristics

The switching characteristics of the module are measured by 2-pulse method with an inductive load (2mH). In the experiment, we set the dV/dt and dI/dt to the same value of the conventional module by adjusting the resistance of the gate driving circuit.

The voltage and current waveforms of the power module during the switching period are shown in Fig.3 at 125 degrees Celsius. The figure shows the waveforms at Vds=600A Ids=40A. The heavy line and the narrow line are the waveforms of the conventional power module and the SiC power module, respectively.

The switching speed (dV/dt and dI/dt) is nearly the same with the conventional power module.

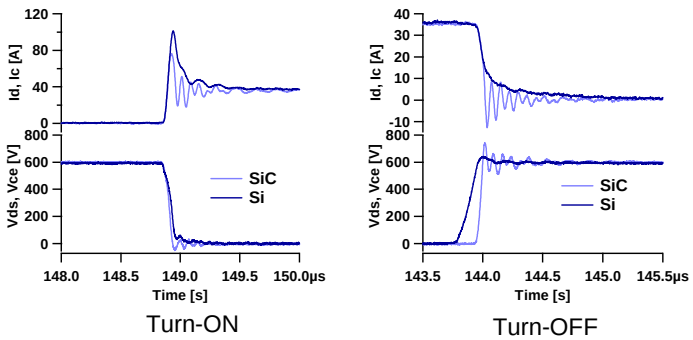

Fig.3 Waveforms of the SiC power module (narrow line) and the conventional power module (heavy line) at Vds=600V and Ids=40A. The left figure is the turn on waveforms and the right figure is the turn off waveforms. The upper and lower figures are current and voltage waveforms, respectively.

PWM operation of the Inverter

For demonstration, a commercial induction motor controller and the gate drive circuitry are modified to the SiC inverter. Figure 4 is the current and voltage waveforms of the SiC inverter recorded from an oscilloscope during a induction motor drive. The SiC inverter carries a maximum peak current of 40A at carrier frequency of 15kHz. The Fig.4 shows the successful drive of a induction motor.

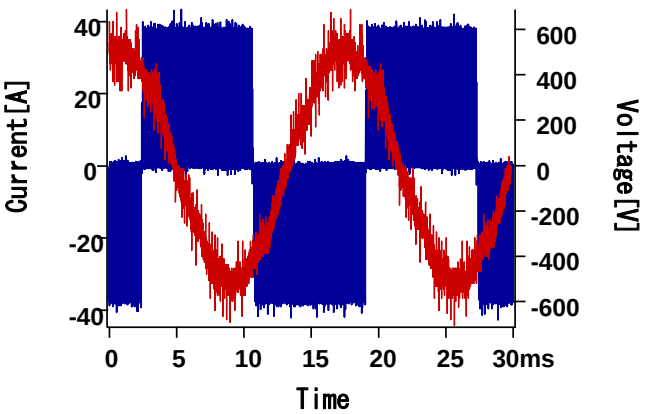

Fig.4 Current and voltage waveforms measured from a SiC inverter at Fc=15kHz.

To estimate the power loss of the inverter, the conduction loss and the switching loss are used. The conduction loss is calculated from the IV characteristics of the device, measured by curve tracer TEKTRONIX 371A at 125 degrees Celsius.

From the measurement of the electric characteristics of the power module, the power loss during the inverter operation is calculated under the assumption of non-simultaneous PWM control with carrier frequency 15kHz, dead time 2us, power factor 0.8, modulation factor 0.8 and Irms=23A.

The calculated loss analysis at 11kW output power is shown in Fig.5. The figure shows that the power loss of the SiC inverter and Si inverter are 130W and 434W, respectively. The SiC inverter can reduce the power loss by 70% from the loss of the conventional Si inverter.

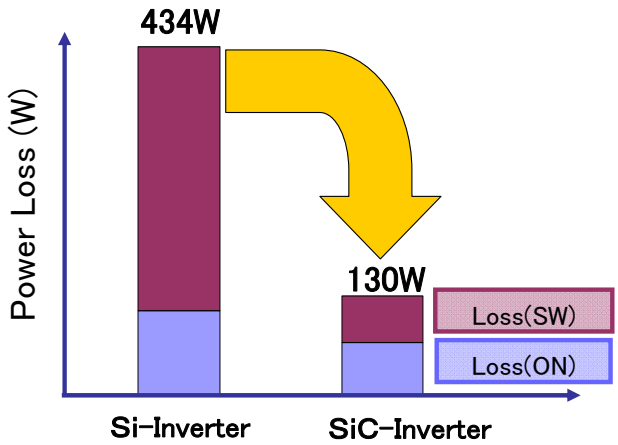

Fig.5 Comparison of the power loss of the Si- and SiC-inverter and the current and voltage waveforms during PWM operation.

3. Conclusions

We fabricate the SiC inverter of rating 14kVA and tested successfully the inverter operation using induction motor. The volume of the fabricated inverter is no more than 1-litter, which is one-forth of the conventional inverter.

The power loss during the operation is estimated from the electrical properties of the power module (static IV characteristics and switching characteristics).

From the loss calculation, we verify that the SiC inverter can reduce the power loss by 70% compared with the conventional inverter.

Acknowledgements

This work was partially supported by the NEDO project, “Development of Inverter Systems for Power Electronics”.

References

[1] S.Kinouchi, H.Nakatake, T.Kitamura, S.Azuma, S.Tominaga, S.Nakata, Y.Nakao, T.oi, and T.Oomori, “High Power Density SiC Converter” Matrerial Science Forum Vols. 600-603, pp1223-1226 (2009).

[2] S. Nakata, S. Kinouchi, T.Sawada, T. Oi, and T. Oomori , “Substantial Reduction of Power Loss in a 14kVA Inverter Using Paralleled SiC-MOSFETs and SiC-SBDs”,Silicon Carbide and Related Materials 2008, pp903-906 (2009).