Extended Abstracts of the 2009 International Conference on Solid State Devices and Materials, Sendai, 2009, pp944-945

A 20-Gb/s Pulse Generator with 4.9-ps FWHM using 75-nm InP-based HEMTs

Yasuhiro Nakasha[1], Yoichi Kawano[1], Toshihide Suzuki[1], Toshihiro Ohki[2], Tsuyoshi Takahashi[1], Kozo Makiyama[1], and Naoki Hara[1]

[1]FUJITSU LIMITED
[2]FUJITSU LABORATORIES LTD.
[1,2]10-1 Morinosato-Wakamiya, Atsugi 243-0197, Japan
Phone: +81-46-250-8244 E-mail: nakasha-y@jp.fujitsu.com

1. Introduction

This paper presents a pulse generator (PG) IC in 75-nm InP-based HEMT technology. The IC generates extremely short pulses having a full width at half maximum (FWHM) of less than 4.9 ps at a bit rate of 20 Gb/s. To the best of our knowledge, the FWHM, which is undeconvolved from an oscilloscope's transition time of 3.5 ps, is a record for PGs using any semiconductor transistors [1] and is as small as that from PGs using nonlinear transmission lines (NLTLs) with Schottky diodes [2]. Picosecond pulses have a great potential for progressing various wideband systems such as signal capturing, broadband communication, and high resolution radar. The transition time of the capturing devices limits performance of sampling oscilloscopes, network analyzers, etc. Picosecond pulses are applicable to wireless communication systems that have a transmission capacity of 10 Gb/s and beyond with frequencies from 100 GHz to several terahertz. Using a PG with 6.5-ps FWHM in 0.1-μm InP HEMT technology, we have already developed a 10-Gb/s impulse radio (IR) system in W-band frequencies (78-93 GHz) [3]. This paper describes a PG developed for realizing IR-based systems with over 10-Gb/s transmission capacity in sub-THz frequencies.

2. InP-based HEMT Technology

A schematic cross-section of InP-based HEMTs we developed is illustrated in Fig. 1 [4]. To improve high-speed and low-noise performance of the HEMT, we shrank the gate length to 75 nm, also, we scaled down the horizontal and vertical dimensions simultaneously for an increase of the transconductance, g_m. Moreover, we introduced a cavity structure around the gate to reduce parasitic capacitances, enabling the HEMT to keep its superior performance even after interconnection process. We used an electron-beam lithography technique for both gate-recess and gate-fabrication processes. A Y-shaped gate electrode consisting of Ti/Pt/Au was evaporated on the InP etching-stopper layer and was lifted off. The Y-shaped gate is very effective for preventing the top gate from peeling off, resulting in a high yield. The surface of the gate-recess was fully passivated with SiN dielectric film before forming the gate electrode. Therefore, the gate-recess remains stable electrically and thermally, which causes the enhancement of the breakdown voltage and reliability. Triple-layer Au-plated interconnections and low-k benzocyclobutene (BCB) dielectric films are employed. Metal-insulator-metal (MIM) capacitors and NiCr thin-film resistors are also formed on the InP substrate. Fig. 2 shows AC characteristics of the 75-nm InP-based HEMT. We achieved the maximum transconductance, g_m of 1.7 S/mm, the cutoff frequency, f_T of 390 GHz, and the maximum oscillation frequency, f_{max} of 490 GHz.

3. Circuit Design

Figure 3 (a) shows a block diagram of the PG. The circuit is mainly composed of two blocks: an NRZ/RZ converter and a pulse generator core. Details of these can be found in refs[5, 6]. The NRZ/RZ converter, which is based on a master-slave topology formed by D-latch and AND circuits, converts a non-return-to-zero (NRZ) signal into a return-to-zero (RZ) signal. The pulse generator core also has a simple AND-based circuit. By adjusting the delay time of each delay control buffer, an overlap time between two signals A and B is created, which is shown in the time chart of Fig. 3 (b). The AND circuit generates a pulse whose width is nearly equal to the overlap time. Therefore, the pulse duration is tunable, which is a preferable advantage for UWB IR-based transmitters [7]. As shown in Fig. 4, a SPICE-based simulation showed that the PG operates at bit rates of more than 20 Gb/s and that the FWHM of the created pulse is about 40% shorter than that of the PG we previously developed [1].

4. Circuit Performance

A microphotograph of the PG is shown in Fig. 5. The chip measures 2.4×1.7 mm. Data and clock signals are input from the left, while the differential pulses corresponding to the data signal are output from the right. The chip contains 218 HEMTs. Fig. 6 shows output pulse waveforms observed by using a 100-GHz oscilloscope when a 2^{11}–1 length pseudo random bit stream (PRBS) at a bit rate of 20 Gb/s was input. The FWHM obtained was as small as 4.9 ps, which is 1.6 ps smaller than that of our previous work. The pulse amplitude was 0.8 V_{pp}. Taking

into account of the bandwidth of the oscilloscope, the intrinsic pulse duration can be estimated as the following:

$$\sqrt{4.9^2 - \left(\frac{0.35}{100\ GHz}\right)^2} = 3.4\ ps$$

The chip consumes 0.8 W, which is almost equal to that of the previous PG. The energy dissipation per pulse is 40 pJ.

5. Summary

Using 75-nm-gate-length InP-based HEMTs, we developed a simple PG that created extremely short pulses whose FWHM was a record and only 4.9 ps. The performance of the PG makes it possible to realize IR-based communication systems with a transmission speed of over 10 Gb/s in sub-THz frequencies.

Acknowledgments

We would like to thank Drs. T. Hirose, K. Joshin, and E. Yano for their encouragement and N. Kurahashi for the device fabrication.

This work was supported in part by the Ministry of Internal Affairs and Communications.

References

[1] Y. Nakasha, Y. Kawano, T. Suzuki, T. Ohki, T. Takahashi, K. Makiyama, T. Hirose, and N. Hara, *IEEE CSICS Dig.*, p. 187, 2008.

[2] M. Case, E. Carman, R. Yu, and M. J. W. Rodwell, *Appl. Phys. Lett.*, Vol. 60, No. 24, p. 3019, 1992.

[3] Y. Nakasha, M. Sato, T. Tajima, Y. Kawano, T. Suzuki, T. Takahashi, K. Makiyama, T. Ohki, and N. Hara, *Proc. of IEEE IMS 2009*, (to be published).

[4] T. Takahashi, M. Sato, K. Makiyama, T. Hirose, and N. Hara, *IEEE IPRM Dig.*, 2008.

[5] T. Suzuki, Y. Kawano, Y. Nakasha, T. Takahashi, K. Makiyama, and T. Hirose, *IEEE CSICS Dig.*, p. 41, 2005.

[6] Y. Nakasha, Y. Kawano, T. Suzuki, T. Ohki, T. Takahashi, K. Makiyama, T. Hirose, and N. Hara, *Ext. Abstr. of the 2007 SSDM*, p. 792, 2007.

[7] J. Han and C. Nyuyen, *IEEE Trans. MTT*, Vol. 54, No. 1, p. 285, 2006.

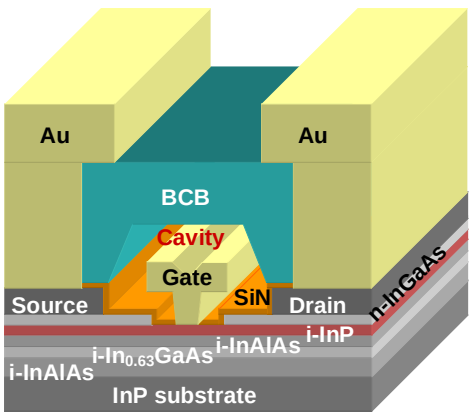

Fig. 1. Cross-section of our 75-nm-gate-length InP-based HEMT.

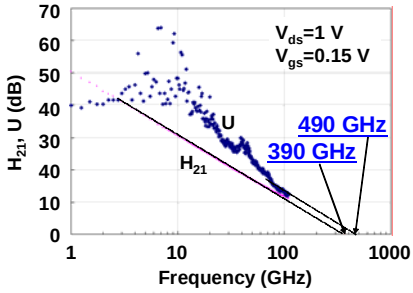

Fig.2. AC characteristics of the 75-nm InP-based HEMT.

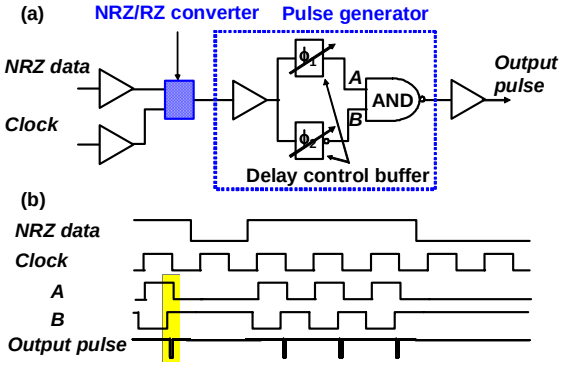

Fig.3. Block diagram (a) and time chart (b) of our PG.

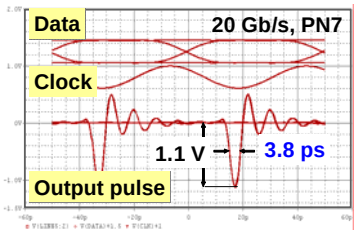

Fig.4. SPICE simulation result of the PG.

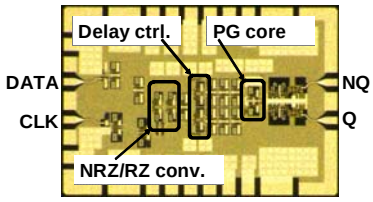

Fig.5. Chip microphotograph of the PG. Chip size is 2.4 × 1.7 mm.

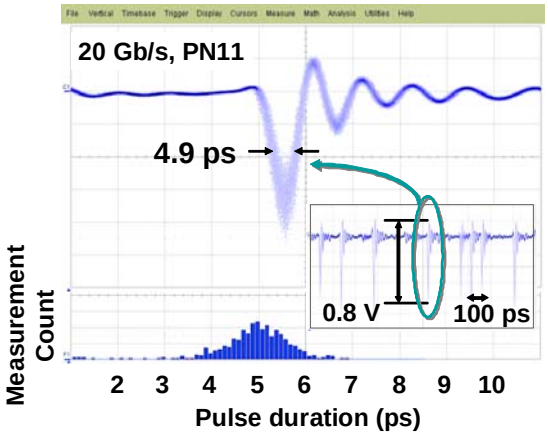

Fig.6. Output pulse waveforms from the InP-based PG.