Extended Abstracts of the 2009 International Conference on Solid State Devices and Materials, Sendai, 2009, pp488-489

Investigation of Surface Passivation on III-V compound Solar Cell Using Photo-electrochemical Oxidation Method

Chun-Yen Tseng[1], Chih-Hung Wu[2], Hwa-Yuh Shin[2] and Ching-Ting Lee[1]*

[1]Institute of Microelectronics, Department of Electrical Engineering
National Cheng Kung University, Tainan, Taiwan, Republic of China
[2]Institute of Nuclear Energy Research Atomic Energy Council,
Taoyuan, Taiwan, Republic of China
*Tel: 886-6-2379582 Fax: 886-6-2362303 E-mail: ctlee@ee.ncku.edu.tw

1. Introduction

Recently, III-V compound solar cells have been studied extensively [1-3]. Owing to their high conversion efficiency and high radiation hardness, GaAs-based solar cells are widely being used in space and applied in the terrestrial concentrator photovoltaic system. However, high surface state density and high surface recombination velocity would deteriorate the performances of III-V semiconductors [4]. Therefore, different passivation methods, such as sulfidation and chlorination, have been investigated to improve the performances of the semiconductor devices [5,6]. In this study, photoelectrochemical (PEC) oxidation treatment was used to grow oxide layer of AlGaAs window layer and to passivate its surface on InGaAs single junction solar cell. The reduction of surface state density on the window layer and the conversion efficiency improvement are also discussed in this study.

2. Experimental procedure

The structure of InGaAs single junction solar cells, as shown in Fig.1, was grown on p-type GaAs substrate by metal organic chemical vapor deposition (MOCVD) system. The samples were cleaned with standard chemical solutions of trichloroethylene, acetone and methanol. Photolithography technique was used to define the pattern of metal electrode area on GaAs contact layer, and AuGeNi/Au (200/100nm) was deposited using an electron beam deposition system. After using lift-off process, the contact layer GaAs was etched approximately 500 nm down to AlGaAs window layer using the selective etching solution of citric acid/H_2O_2/H_2O (18g/2.5mL/10mL). The as-etched samples were treated using PEC oxidation method. In this system, the samples were oxided in an HCl electrolytic solution under a pH value of 3.5 by illuminating a He-Ne laser of 632.8 nm wavelength. The PEC oxidation reactive area on AlGaAs surface was 92.5% in each defined pattern (1 x 1 mm^2). During the oxidation process, 1, 1.5, 2, and 2.5 voltages were applied for 3 min to induce the reactions on the AlGaAs surface. After using the PEC treatment, samples were rinsed with deionized water and blown dry with N_2. The TiO_2/SiO_2 (74/120nm) anti-reflection coating layers were immediately deposited on both samples (with and without PEC treatment) using electron beam deposition system. The conversion efficiency of the solar cells with and without PEC treatment was measured using a continuous solar simulator system under AM 1.5G (100mW/cm^2 at 25°C). Moreover, to further investigate the efficiency improvement of the cell by using the PEC oxidation mechanism, both as-etched and PEC-treated specimens were analyzed by fabricating the MOS devices.

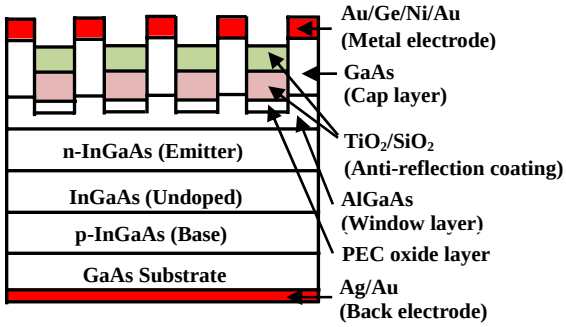

Fig.1 The structure of InGaAs single junction solar cells.

3. Experimental Results and Discussion

Figure 2 shows the illuminated current density-voltage (J-V) curves under AM1.5G of the III-V compound solar cells with and without PEC oxidation treatment. Based on the experimental results, the fill factor (FF), conversion efficiency (η), short-circuit current density (J_{sc}) and open-circuit voltage (V_{oc}) were calculated. The short circuit current density (J_{sc}) of 23.4 mA/cm^2 and 19.6 mA/cm^2 were obtained and the corresponding open circuit voltage (V_{oc}) were 0.87 V and 0.84 V for the devices with and without PEC treatment, respectively. After the PEC surface treatment, the conversion efficiencies were promoted to the 15.7 % than 12.5 % of the solar cells without PEC oxidation treatment.

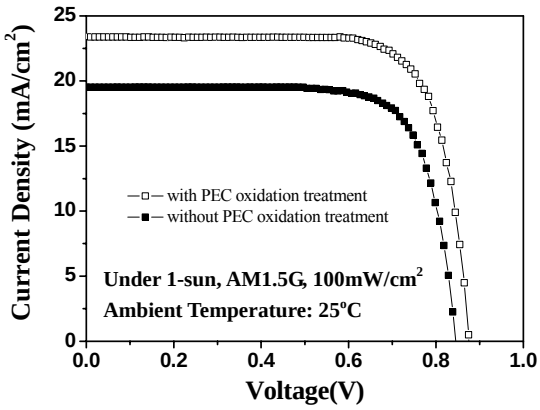

Fig.2 The illuminated current density-voltage characteristics of the III-V compound solar cells with and without PEC oxidation treatment.

To improve the capability of carrier extraction, the PEC oxidation treated window layer (AlGaAs) on the III-V compound solar cells was investigated. Figure 3 shows the result of dark current-voltage characteristics of the III-V compound solar cell. The curves show that the reverse saturation current was reduced by PEC oxidation treatment. This result can be ascribed to the lower surface recombination current [7], which is accordance with the calculation of interface state density from C-V measurement (discussed later) revealing PEC oxidation treatment effectively reduces the surface state density.

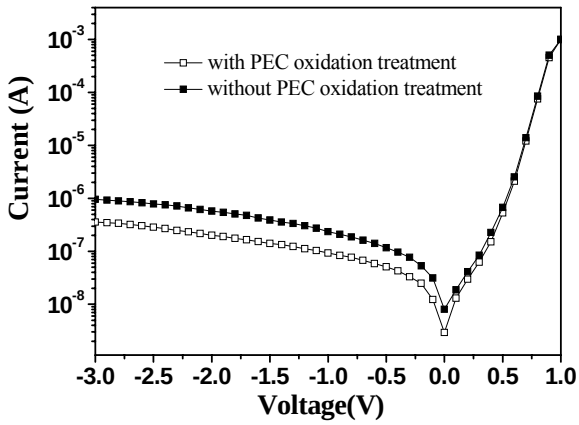

Fig.3 The dark current-voltage characteristics of the III-V compound solar cells with and without PEC oxidation treatment.

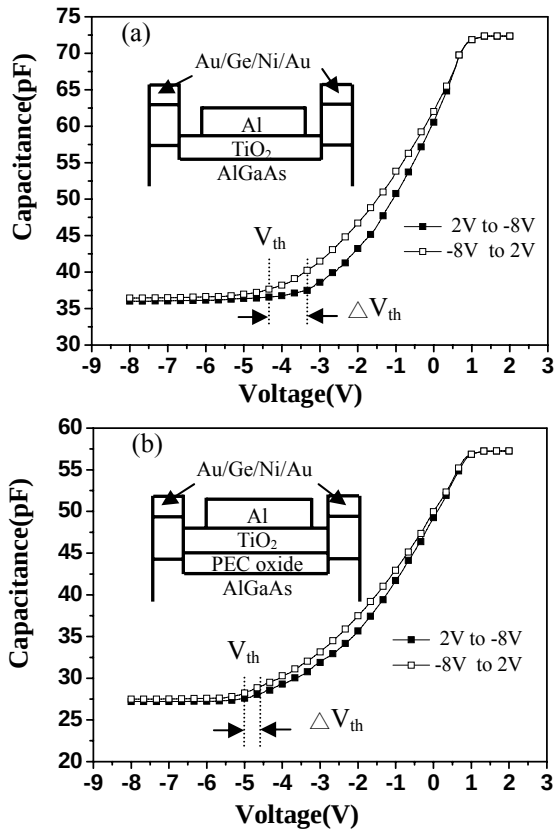

Fig.4 The capacitance-voltage characteristic for MOS capacitor
(a) with TiO_2/n^+-AlGaAs interface and
(b) with PEC oxide/n^+-AlGaAs interface.

To investigate the interface state density, the capacitance-voltage characteristics (C-V) were measured. Usually, interface states are occupied by hole for voltage sweeping from inversion to accumulation and occupied by electron for voltage sweeping from accumulation to inversion. Consequently, the hysteresis between the two curves is proportional to the average interface trap density. Therefore, interface state density D_{it} can be estimated as [8]:

$$D_{it}=(C_{ox}\triangle V_{th})/(AqE_g) \quad (1)$$

where C_{ox} (= 72.35,and 57.25pF) and A (= 3.14 × $10^{-4}cm^2$) are the capacitance and gate area of the MOS device, respectively; q is the electron charge, E_g (= 1.8 eV) is the energy gap of n-type $Al_{0.3}Ga_{0.7}As$, and $\triangle V_{th}$ (= 1.02,and 0.50 V) is the voltage shift due to the different charging conditions of interface state. The C-V characteristic was shown in Fig.4. Calculated interface state density for TiO_2/n^+-AlGaAs interface was 8.16×10^{11} $/cm^2eV$ and for PEC oxide/n^+-AlGaAs interface it was 3.16×10^{11} $/cm^2eV$.

In summary, the conversion efficiency improvement of InGaAs single junction solar cell with PEC treatment is more than 3.2 % compared to the solar cells without PEC treatment. According to C-V measurement results, this improvement is attributed to the passivation of dangling bonds and the reduction of surface state density. Therefore, the loss of the photo-induced carriers can be reduced. It is concluded that the PEC surface treatment is a promising method for improving the performance of InGaAs single junction solar cells. In this work, the conversion efficiency improvement of the PEC-treated solar cells was focused, since the epitaxial structure was used for fabricating solar cells with and without PEC oxidation treatment.

Acknowledgement

The authors gratefully acknowledge the financial support from the National Science Council and Institute of Nuclear Energy Research Atomic Energy Council of Taiwan, Republic of China of Taiwan, R.O.C. under contract no. NSC- 98-NU-E-006-018.

References

[1] M. Yamaguchi, K. Nishimura, T. Sasaki, H. Suzuki, K. Arafune, N. Kojima, Y. Ohsita, Y. Okada, A. Yamamoto and T. Takamoto, Sol. Energy **82** (2008) 173.

[2] Y. Mols, M. R. Leys, E. Simons, J. Poortmans and G. Borghs, J. Cryst. Growth **298** (2007) 758.

[3] I. R. Stolle, I. Garcia, B. Galiana and C. Algora, J. Cryst. Growth **298** (2007) 762.

[4] L. W. Lai, J. T. Chen, L. R. Lou, C. H. Wu and C. T. Lee, J. Electrochem. Soc. **155** (2008) B1270.

[5] H. J. Tang, X. L. Wu, K. F. Zhang, Y. F. Li, J. H. Ning, Y. Wang, X. Li and H. M. Gong, Appl. Phys. A **91** (2008) 651.

[6] P. S. Chen, T. H. Lee, L. W. Lai and C. T. Lee, J. Appl. Phys. **101** (2007) 024507.

[7] S. Omae, T. Minemoto, M. Murozono, H. Takakura and Y. Hamakawa, Jpn. J. Appl. Phys. **45** (2006) 1515.

[8] J. Tan, K. Das, J. A. Cooper, Jr. and M. R. Melloch, Appl. Phys. Lett. **70** (1997) 2280.