Extended Abstracts of the 2010 International Conference on Solid State Devices and Materials, Tokyo, 2010, pp1078-1079

Design of Broadband Optical Switch Based on Mach-Zehnder Interferometer with Si wire Waveguides

Kenji Kintaka, Yuya Shoji, Satoshi Suda, Hitoshi Kawashima, Toshifumi Hasama and Hiroshi Ishikawa

Network Photonics Research Center, National Institute of Advanced Industrial Science and Technology
Central 2, 1-1-1 Umezono, Tsukuba, Ibaraki 305-8568, Japan
Phone: +81-29-861-5479 E-mail: kintaka.kenji@aist.go.jp

1. Introduction

To silicon-based photonic devices, much attention has been paid in the last decade because of their compactness and compatibility with CMOS process that enable to integrate a large number of photonic components as well as electronic components. A 2 × 2 optical switch based on Mach-Zehnder interferometer (MZI) is one of fundamental components in the photonic circuits, and is required to have wavelength-insensitive characteristics in wavelength-division multiplexing (WDM) systems. A conventional MZI switch using directional couplers (DCs) for 3-dB power splitting, however, depends largely on wavelength due to the wavelength dependence of the 3-dB DCs. A wavelength-insensitive coupler (WINC) based on MZI configuration has been reported in a SiO_2-based waveguide [1]. Broadband MZI switches using WINCs have also been demonstrated in SiO_2-based waveguides [2, 3] and in a Si rib waveguide [4].

In this work, we design a 3-dB WINC using a Si wire waveguide. We numerically estimate wavelength dependence of the designed WINC, and compare it with those of a DC and a multimode interference (MMI) coupler. We also estimate and compare wavelength dependences of MZI switches using DCs, MMI couplers, and WINCs.

2. Design of 3-dB DC, MMI coupler, and WINC

We designed 3-dB couplers for TE-like mode at an operating wavelength of 1.55 μm. The waveguide consists of a Si core with 420 nm × 220 nm cross-section and SiO_2 cladding. The refractive indices of Si and SiO_2 were set to be 3.478 and 1.444, respectively. Figure 1 illustrates schematic views of the designed DC, MMI coupler, and WINC. The bend radius and the waveguide gap in the DC were set to be 10 μm and 250 nm, respectively. The MMI coupler has tapered inputs and outputs for reduction of the insertion loss. The width of MMI region was chosen to be 2.7 μm. The WINC is based on an asymmetric MZI configuration using two DCs with different coupling lengths.

The device characteristics were calculated by finite-difference time-domain method, beam-propagation method (RSoft Design Group; FullWAVE, BeamPROP), and theoretical formulas. The wavelength dependences of transmittance for DC, MMI coupler, and WINC are shown in Fig. 2. Solid and dashed curves show transmittances of

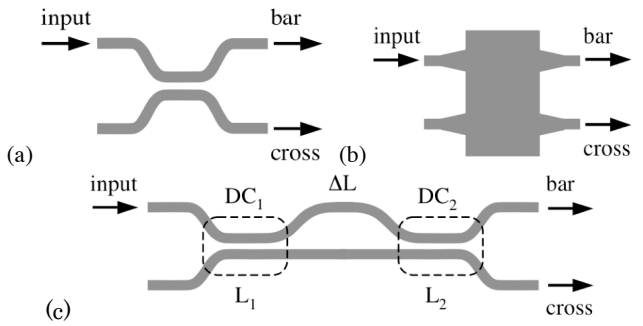

Fig. 1 Schematic views of (a) DC, (b) MMI coupler, and (c) WINC.

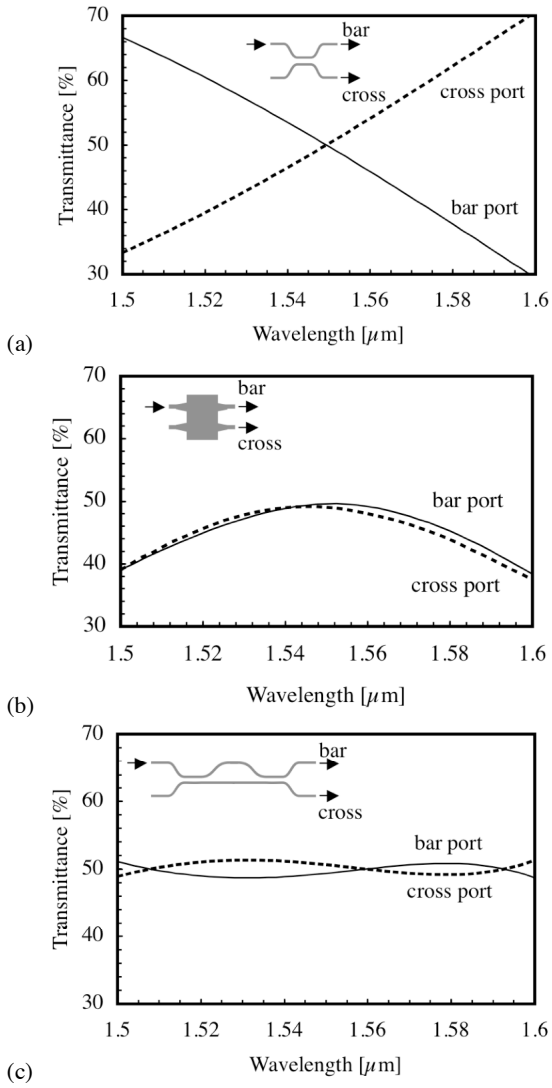

Fig. 2 Wavelength dependences of (a) DC, (b) MMI coupler, and (c) WINC.

the bar and cross ports, respectively. The transmittance difference between two ports in the DC increases rapidly as the wavelength shifts from the designed value, which is also explained theoretically. As for the 3-dB MMI coupler, the small imbalance in transmittance between two ports is obtained in the wavelength range of 1.5 to 1.6 μm, though the total transmission decreases gradually with the wavelength shift from the center. The transmittances of both ports in the 3-dB WINC remain to be about 50% in the wavelength range of 1.5 to 1.6 μm.

3. Characteristics of MZI Switches using DCs, MMI couplers, and WINCs

The designed symmetric MZI switches using the 3-dB DCs, MMI couplers, and WINCs are depicted in Fig. 3. The MZI switch using DCs or MMI couplers has one phase shifter in the arm, whereas the MZI switch using WINCs has three phase shifters for constructing tunable WINCs. The wavelength dependences of the MZI switches are calculated by transfer matrix method. The calculated wavelength dependences of the MZI switches for "off" and "on" states of the phase shifters are shown by dashed and solid curves in Fig. 4, respectively. The insertion loss for "off" state of the MZI switch using DCs increases gradually with the wavelength shift from the center, whereas the insertion loss for both states of the MZI switch using MMI couplers increases rapidly with the wavelength shift from the center. Bandwidths for crosstalk level lower than –30 dB are estimated to be 7 nm, >100 nm, and >100 nm for "off" state in the MZI switches using DCs, MMI couplers, and WINCs, respectively. The low-crosstalk bandwidths for "on" state are estimated to be 30 nm, 30 nm, and >100 nm in the MZI switches using DCs, MMI couplers, and WINCs, respectively. The broad low-crosstalk bandwidth for both states in the MZI switch with WINCs are achieved by adjustment of phase shifters in WINCs, though the MZI switch with tunable WINCs requires higher power consumption.

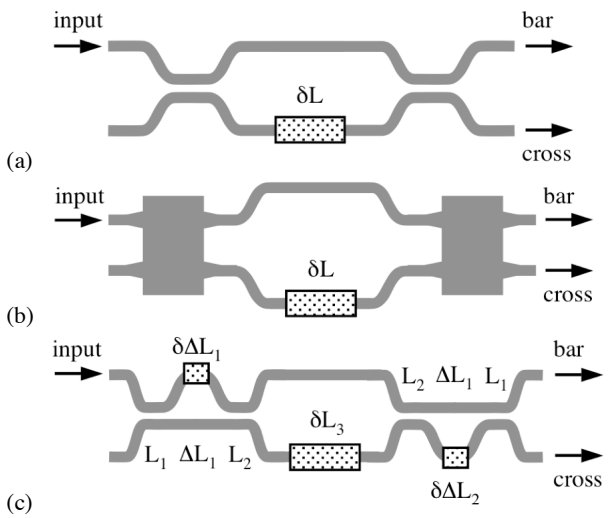

Fig. 3 Schematic views of MZI switches using (a) DCs, (b) MMI couplers, and (c) tunable WINCs

4. Conclusions

We designed MZI switches using DCs, MMI couplers, and WINCs with Si wire waveguides for realization of broadband operation. We numerically calculated and compared the wavelength dependences of the MZI switches. Experimental work is now under study.

Acknowledgements

This work was supported in part by Special Coordination Funds for Promoting Science and Technology from the Ministry of Education, Culture, Science and Technology, Japan.

References

[1] K. Jinguji, N. Takato, A. Sugita, and M. Kawachi, Electon. Lett. **26** (1990) 1326.

[2] T. Kitoh, N. Takato, K. Jinguji, M. Yasu, and M. Kawachi, IEEE Photon. Technol. Lett. **4** (1992) 735.

[3] K. Jinguji, N. Takato, Y. Hida, T. Kitoh, and M. Kawachi, J. Lightwave Technol. **14** (1996) 2301.

[4] J. Van Campenhout, W. M. J. Green, S. Assefa, and Y. A. Vlasov Opt. Express **17** (2009) 24020.

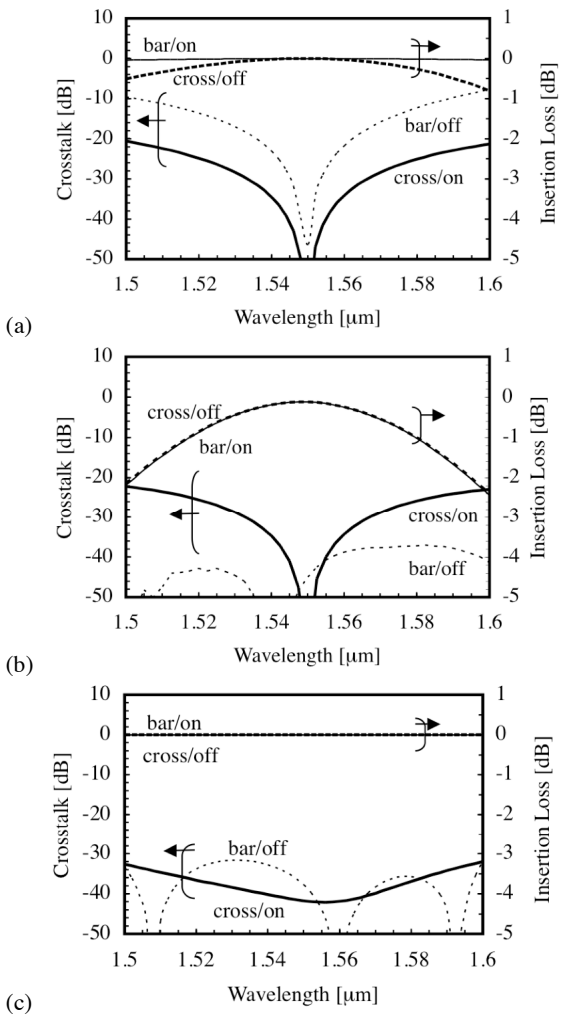

Fig. 4 Wavelength dependences of MZI switches using (a) DCs, (b) MMI couplers, and (c) tunable WINCs.