Extended Abstracts of the 2010 International Conference on Solid State Devices and Materials, Tokyo, 2010, pp1154-1155

A CMOS Image Sensor with an Automatic Pixel-Sensitivity Adjustment Function

Gilberto RAMOS[1], Yukari HIRATA[2], and Yutaka ARIMA[1]

[1]Center for Microelectronic System, Kyushu Institute of Technology
[2]Fukuoka Industry, Science and Technology Foundation
[1,2] 680-4, Kawazu, Iizuka, Fukuoka 820-8502, JPN
TEL: [1,2]+81-948-29-7590, FAX: [1,2]+81-948-29-7586, E-Mail: [1]gilramosm@cms.kyutech.ac.jp

1. Introduction

In recent years CCD and CMOS Image sensors are been used in outdoor environments as security camera systems and traffic control systems. In order to function outdoor the image sensor has to be able to work under a wide variety of light conditions. The use of wide dynamic range image sensors is necessary. Wide dynamic range image sensors using lateral overflow integration capacitor [1], multi-exposure image sensor [2] and a image sensors with pulse modulation [3] have been proposed. However, low contrast [1][3] and the need for picture composition [2] are some problems these sensors have. In order to solve these problems, extra memory and processors are needed.

We developed an image sensor LSI with an automatic sensitivity adjustment function. The developed sensor is able to capture pictures where there is a significant difference of light intensity, without the need of extra memory or processors. Furthermore, the effect of the backlight in the field of view is automatically restrained and the contrast of the dark areas is increased.

2. Chip Configuration

Figure 1 shows a microphotograph of the developed chip. The sensor LSI block configuration is shown in Figure 2. The chip was produced using a process of 0.35μm CMOS 1-poly 3-metal and has a die size of 3.75mm × 3.72mm.

The sensor LSI is composed by an array of 128 by 128 pixel circuits, 128 horizontal shift registers, 128 vertical shift registers, 128 selector circuits and an amplifier. The shift registers and selector circuits are used to output one by one the pixel circuit's output value. The output signal is then passed through the amplifier.

3. Pixel Circuit

The pixel circuit is shown in Figure 3. In the conventional image sensors the exposition time is determined by a control signal applied to all pixels. However, in the developed image sensor the exposition time for each pixel is automatically determined by the brightness of the pixel and its neighboring pixels.

The brightness signal values are averaged by connecting the pixel circuits through MOSFET channels (Mc). The pixel array connection configuration is shown in Figure 4. The value of the connection resistance can be adjusted by controlling the gate voltage Vbr. The average of the neighboring pixels' brightness can be obtained from the resistance connection between pixels. When the average value exceeds a threshold value a MOSFET switch (Ms) within the pixel circuit activates and determines the exposition time for that pixel. After the switch is activated the charge on capacitor C is no longer changed. The gate voltage Vbp adjusts the average light intensity that decides the shutter timing. Rst is the reset signal and Read is the signal that selects the pixel read out timing. Figure 5 shows the pixel layout. The pixel size is 20μm by 20μm and has a fill factor of 33%. An automatic pixel-sensitivity adjustment function was practically achieved by the use of the proposed pixel circuit.

4. Measurement Results

The measurement results are shown in Figure 6. A CCD camera image(a)(c), and an image by the proposed sensor(b)(d). The pictures were taken using a strong backlight.

The picture results show that the developed chip is able to detect the object's pattern despite the strong backlight. When there is a high light intensity we can observe that the CCD camera reaches a saturation point. In comparison, the developed sensor LSI does not saturates and is able to display the areas that are close to the light source, even up to the small LED used in light source. Even when facing a stronger backlight, the developed sensor LSI has a better performance than that of the CCD camera. The backlight intensity was 20,000 lx for Figure 6 (a), (b) and the 100,000 lx for Figure 6 (c), (d). The dark area light intensity varies from 5 lx to125 lx.

The chip uses a 3.0V supply voltage and has a power consumption of 267mW. The sensor LSI has a frame rate of 24fps. The output time for all pixels is 1.6ms.

5. Conclusion

We developed a image sensor LSI that automatically adjusts the exposition time for each pixel according to the brightness of its surrounding pixels. The developed sensor LSI uses a 0.35μm CMOS 1-poly 3-metal process and has a die size of 3.75mm × 3.72mm. The power consumption is 267mW. The developed sensor LSI is able to detect objects, without having signal saturation, even when facing a strong backlight. We were also able to confirm that the sensor enhances the object's pattern contrast of the dark area. The sensor can capture images from various scenes, including those with a strong backlight, without the need of extra memory or processors. Therefore, we expect that this work contributes to the shift towards low cost of outdoor security cameras.

The image sensor has a fixed pattern noise. However, this problem can be solved by adding a Correlated Double Sampling (CDS) circuit.

Acknowledgement

This work was partly supported by a grant of Knowledge Cluster Initiative implemented by Ministry of Education, Culture, Sports, Science & Technology (MEXT).

References

[1]N. Akahane; S. Sugawa; S. Adachi; K. Mori; T. Tuichi; K. Mizobuchi; (2006) IEEE, J. Solid-State Circuits, Vol.41, Issue 4, pp851-858

[2] M. Sasaki; M. Mase; S. Kawahito; Y. Tadokoro; Proceedings of IEEE Sensors 2004, pp 967-972

[3] Yong Chen, Fei Yuan, Gul Khan, Microelectronics Journal 40 (2009) 1496-1501.

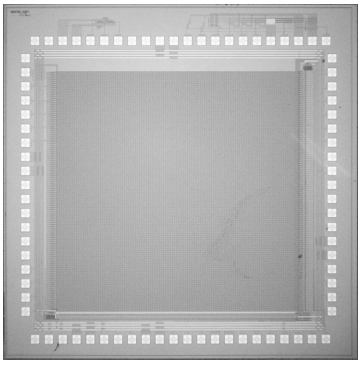

Figure 1. Chip Microphotograph

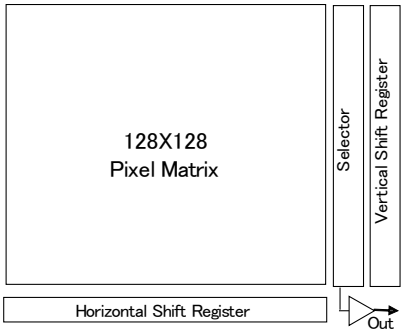

Figure 2. Chip-level block diagram

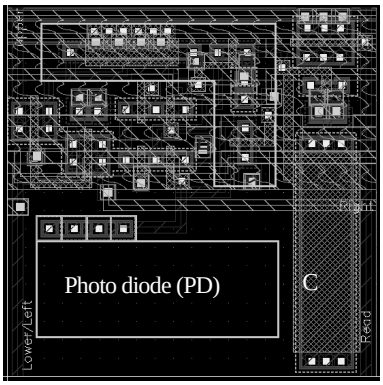

Figure 5. Pixel Layout

Table I. Chip Characteristics

Process	0.35μm CMOS 1poly 3 metal
Die size	3.75 mm x 3.72mm
Power supply	3.0 V
Power dissipation	267 mW
Pixel Number	128×128
Pixel Size	20 μm×20μm
Fill Factor	33 %

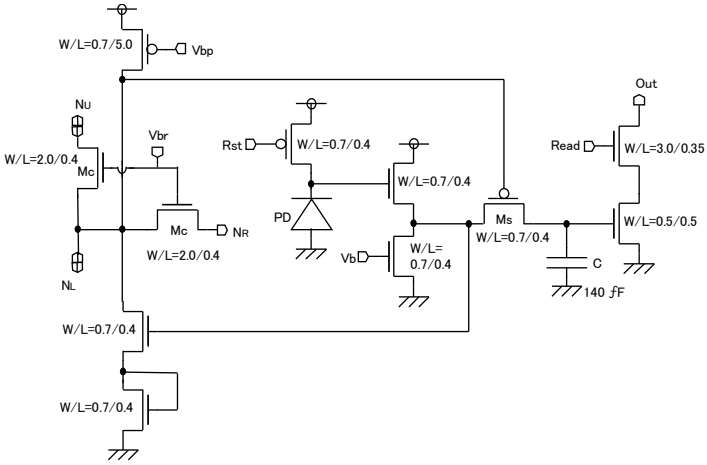

Figure 3. Pixel Circuit

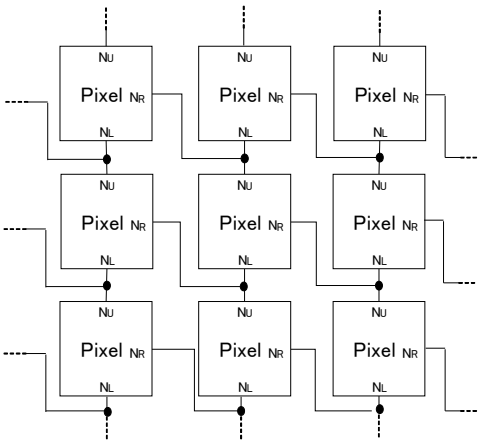

Figure 4. Pixel Array

(a) CCD camera

(b) Proposed Sensor

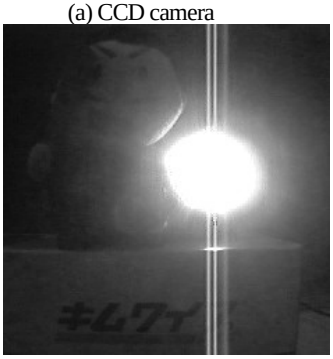

(c) CCD camera

(d) Proposed Sensor

Figure 6. Measurement Results