Extended Abstracts of the 2010 International Conference on Solid State Devices and Materials, Tokyo, 2010, pp215-216

New Concept of Plasma-induced Damage in MNOS FET during Thick Dielectric Film Etching Using Fluorocarbon Gas Plasma

Yoshinari Ichihashi, Yasushi Ishikawa, and Seiji Samukawa

Institute of Fluid Science, Tohoku University, Katahira 2-1-1, Aoba-ku, Sendai 980-8577, Japan.
Phone/FAX: +81-22-217-5240/+81-22-217-5240 E-mail: samukawa@ifs.tohoku.ac.jp

1. Introduction

Plasma etching is one of the most important processes for microfabrication of metal-insulator-semiconductor (MIS) devices and sensors . However, plasma irradiation damage to these devices causes serious problems, such as an increase in interface state density between SiO_2 and Si during the dielectric film etching process using perfluorocarbon gas chemistries. Previously, we reported that the increase in the interface state of MIS devices was caused by ultraviolet (UV) photon irradiation during the plasma process, and the interface state generation substantially degraded the performance of devices such as charge-coupled devices (CCDs) [1]. UV photon irradiation damage strongly depends on the species of gas chemistry, and the optimum gas chemistry must be determined for reducing UV photon irradiation damage. We also reported that dangling bonds (*E'* centers) are generated in SiO_2 films irradiated with UV photons and bombarded with ions during the plasma-etching process [2]. Recently, we found that the charge-pumping current noticeably increased by increasing the substrate bias for accelerating ions during plasma etching to etch thick dielectric film (SiO_2 or Si_3N_4: 2 μm thick). However, the interface state is generally considered caused by generating dangling bonds at the interface between SiO_2 and Si by penetration of UV photons rather than ion bombardment because ions cannot penetrate such thick dielectric film. Therefore, this phenomenon cannot be explained just by UV photon irradiation.

We developed a new mechanism for increasing the charge-pumping current of metal-nitride-oxide-silicon field effect transistors (MNOS-FETs) when supplying substrate bias during plasma etching for a thick dielectric film. We found that the increase in the charge-pumping current was caused by a combination of charged carriers generated in the dielectric film and Si dangling bonds at the SiO_2/Si interface (Pb centers) generated from the penetration of UV photons into the SiO_2/Si interface.

2. Experiment

Figure 1 shows the experimental setup for plasma etching. Applying 13.56 MHz of radio frequency (RF) power to one turn antenna generates CF_4 or Ar inductively coupled plasma (ICP) under a continuous wave. Furthermore, we supplied substrate bias RF power (at 600 kHz) to evaluate the effect of ion energy. By varying the RF bias power, we can change the peak-to-peak voltage (Vpp) from 0 to about 1.5 kV. The gas flow rate of CF_4 or Ar was fixed at 50 sccm under a chamber pressure of 2.6 Pa.

The interface state density was evaluated using a charge-pumping method with an MNOS-FET as a charge-pumping current [3]. Figure 2 shows a schematic of an MNOS-FET for measuring the charge-pumping current. The gate structure of the MNOS-FET was a poly-Si rectangular electrode (20 × 28 μm) and a gate insulation film of LP-CVD Si_3N_4 (25 nm)/thermal SiO_2 (65 nm). This transistor was an n-channel type. A gate voltage from –6 to 1 V was applied to the gate electrode. The pulse frequency applied to the gate electrode was 500 kHz, and the wave height was 4 V. The Overall thicknesses of the SiO_2 and Si_3N_4 films on the transistor were 2 and 1 μm, respectively. When the CF_4 plasmas were irradiated to the transistor, it appeared that only UV photons of wavelengths more than 200 nm penetrated the interface between the gate SiO_2 and Si substrate. This is because the UV photons of such wavelengths were almost absorbed into the thick SiO_2 and

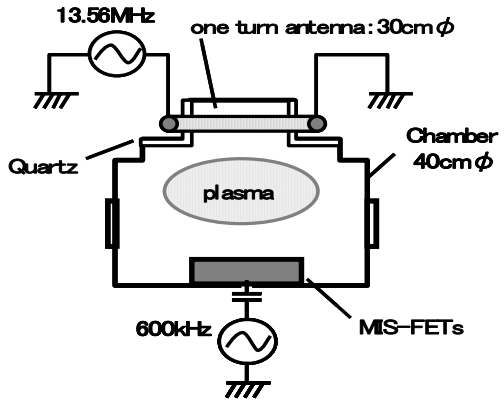

Fig. 1. Experimental setup

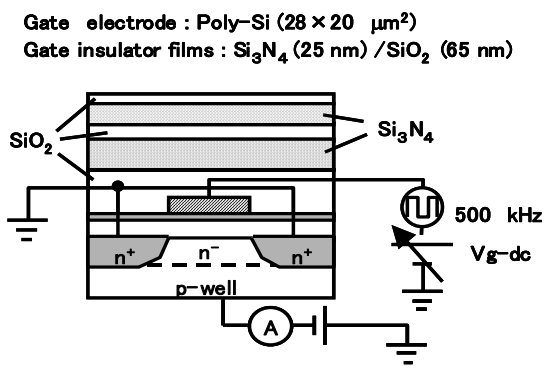

Fig. 2. MNOS-FET for measuring charge-pumping current

Si_3N_4 films. On the other hand, when the Ar plasma is irradiated, the interface state is not generated because the wavelength of the UV photons irradiated Ar plasma is less than 200 nm.

3. Results and Discussion

Figure 3 shows the charge-pumping current as a function of Vpp in CF_4 or Ar plasmas at an ICP power of 1 kW. When Vpp was 0 V in CF_4 plasma, the charge-pumping current was 0.05 nA. This damage was caused by UV photon irradiation in the CF_4 plasma. By increasing Vpp in the CF_4 plasma, the charge-pumping current also increased and was about 1.1 nA when Vpp was about 1400 V. Conversely, in Ar gas plasma, the charge-pumping current was at most 0.12 nA when Vpp was 1500 V. This result suggests that ion bombardment could not reach the SiO_2/Si interface and could not generate the interface state because of the thick insulation films. Based on these results, we speculate that the dependence of the charge-pumping current on Vpp in CF_4 plasma is caused by a combination of generating the interface state due to UV photon irradiation and generating electron-hole pairs in the film due to ion bombardment onto thick SiO_2 film.

To clarify the mechanism of this damage, Ar plasma with substrate bias was irradiated after irradiating CF_4 plasma without bias. Figure 4 shows the charge-pumping current as a function of Vpp in Ar plasma after CF_4 plasma irradiation without bias. The charge-pumping current at 1200 V was 0.3 nA, which was about five times larger than that (Fig. 3) by pure Ar plasma irradiation. Figure 5 shows the damage mechanism caused by CF_4 plasma etching with substrate bias. First, UV photon irradiation (>200 nm) in CF_4 plasma generates Si dangling bonds (Pb centers) at the SiO_2/Si interface. Most of these Pb centers do not have charges and they cannot be detected as the charge-pumping current. When electron-hole pairs are generated in thick SiO_2 film by ion bombardment, the generated charged carriers reach the Pb centers, which play a role as trap centers for the charge-pumping current. We found that control of both UV photon and ion bombardment were important for eliminating damage at the SiO_2/Si interface in MNOS devices.

4. Conclusion

We investigated the damage mechanism from perfluorocarbon gas plasma with substrate bias. We found that charged carriers generated by ion bombardment onto thick SiO_2 film were trapped at Si dangling bonds (Pb centers) generated by UV photons irradiation of wavelengthsmore than 200 nm at the SiO_2/Si interface during CF_4 plasma etching. As a result, the charge-pumping current in MOS devices strongly depends on UV wavelength and substrate bias during CF_4 plasma etching. Therefore, control of both UV photon irradiation and ion bombardment is important for eliminating damage at the SiO_2/Si interface in MOS devices.

References

[1] M. Okigawa, Y. Ishikawa and S. Samukawa, Jpn. J. Appl. Phys., 42 (2003) 2444.

[2] Yasushi Ishikawa, Yoshinari Ichihashi, Satoshi Yamasaki and Seiji Samukawa, J. Appl. Phys 104,(2008),063306-1

[3] G. Groeseneken, H. E. Maes, N. Beltrán and R. F. De Keersmaecker: IEEE Trans. Electron Device vol. ED-31 42 (1984).

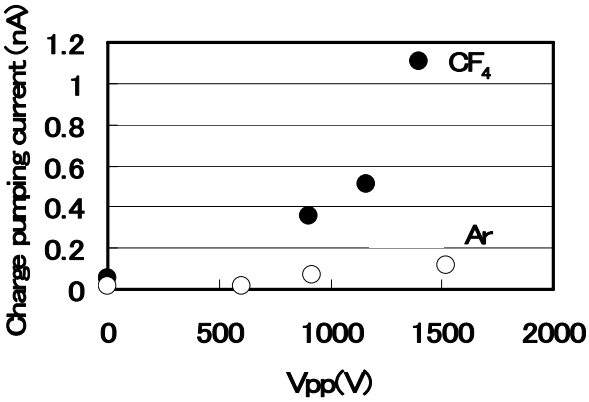

Fig. 3. Charge-pumping current as function of Vpp at 1 kW of ICP power in CF_4 or Ar plasma

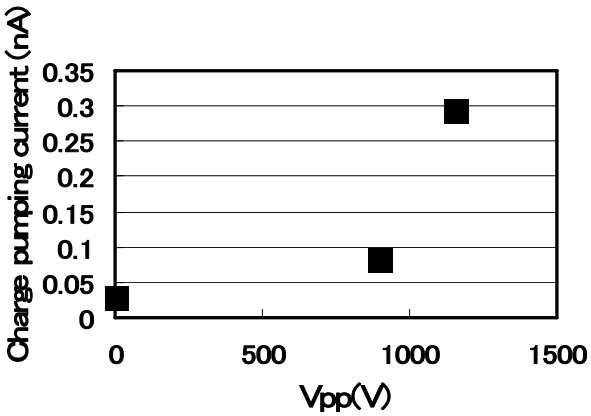

Fig. 4. Charge-pumping current as function of Ar plasma Vpp after CF_4 plasma irradiation

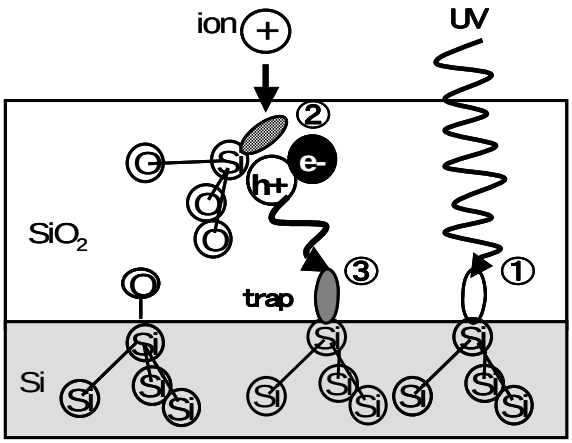

Fig. 5. Mechanism of interface state generated by UV photon and ions