Extended Abstracts of the 2010 International Conference on Solid State Devices and Materials, Tokyo, 2010, pp503-504

Estimation of Electron Injection Barrier Height at Metal/ Polymer Interface by Internal Photoemission Spectroscopy and its Schottky Current Analysis

Eiji Itoh and Shinya Takaishi

Shinshu University
Dept. of Electrical and Electronic Engineering, Shinshu University,4-17-1, Wakasato, Nagano 380-8553, Japan

Phone: +81-26-269-5227 E-mail: eitoh@shinshu-u.ac.jp

1. Introduction

The interface properties of metal/ insulator and metal/ semiconductor attract an unprecedented attention in the electronic thin film devices, such as organic light emitting diodes (OLEDs) and organic field effect transistors (OFETs).

In general, the barrier height for electrons is assumed as the difference of the lowest unoccupied molecular orbital (LUMO) of organic material, and the work functions of the cathode. However, the reported values of work functions and LUMO levels have strong variation depending on the measuring method, and the surface states and the interfacial dipole moment also modify the barrier height seriously [1-5]. Therefore, the direct measurement method for the barrier height at the electrode/ organic interface is required under the device operation. Internal photoemission (IPE) spectroscopy provides the most straightforward way to characterize the relative energies of electron states at interfaces of insulators (or wide-gap semiconductor) from the Fermi level of metals by measuring the spectral onset of electron/hole photoemission[6-10]. However, in general, it is difficult for OLEDs and solar cells to reduce the leakage current less than 1nA/cm^2 under the electric field with the order of 10^{5}V/cm, while the typical measured IPE current is only the order of 0.1-10nA/cm^2 under this high electric field and the illumination of monochromatic light of 1mW/cm^2. Moreover, IPE of electrons are emitted from the cathode while IPE of holes is possible from the anode. Thus, currently, IPE technique is not popular in organic thin film device. We, therefore, recently developed the efficient "electron only devices" with three layered structure consisting of TiO_2 layer, thin film electron transporting inter-layer and the target organic films. We have then investigated the electron injection barrier height at metal/ Alq_3 interface [11].

In this study, we have investigated the metal/ polyfluorene derivatives interface by IPE techniques and correlated the results with current analysis based on the Shottky thermal emission current model. Here, we employed the three layered structure consisting of TiO_2 deposited on indium tin oxide (ITO), very thin electron transporting polyimide inter layer (IL), and fluorine based conducting polymer which is covered by various types of cathode.

2. Experimental

About 100nm-thick-TiO_2 film was prepared on 20nm-thick indium-tin-oxide (ITO) coated glass substrate by sol-gel technique [11, 12]. About 20nm-thick polyimide were coated on TiO_2 followed by the heat-treatment at 300°C. 200nm-thick-poly (9,9-dioctylfluorinyl- 2,7-diyl) (F8) were spin-coated from 10-15g/l toluene solution. Finally, 50nm-thick Au, Ag, Al, MgAg (10:1), and CsF/Al were thermally evaporated as cathode. The electrode area was 0.2×0.2 cm^2. Here, the equivalent thickness of TiO_2 / IL stack was about 30nm as a dielectric film with the relative dielectric constant of 3, and most of the external voltage was applied to F8 layer.

IPE and current-voltage curves were measured in a temperature controlled vacuum chamber. The IPE current was determined as the difference between the photocurrent measured under monochromatic light (energetic resolution of ~0.01eV) illuminated through ITO electrode [11].

3. Results and Discussions

Figure 1 shows the energy diagram of materials used in this study. The work-functions of Au and ITO electrodes were estimated to be 4.75eV and 4.8eV from low energy photo-electron emission measurement under ambient atmosphere by AC-2 (Riken Keiki Co. Ltd.). The work function of MgAg, Al, and Ag was measured from the contact potential difference between Au electrode and these metal electrodes [11-13]. The work-function of Al, MgAg, Ag electrodes were then estimated as 4.0, 3.7, 4.3eV. As can be clearly seen in Fig. 1, the energy diagram at the TiO_2, IL

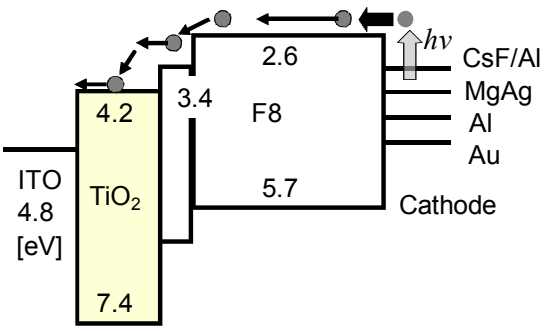

Fig. 1 Energy diagram of each material used in this study. (before contact)

and F8 favors a smooth transfer when electrons overcome the metal/F8 interface.

Figure 2 shows the IPE spectra of electron injection from various cathode materials to F8 under forward biasing. From Fig. 2, the barrier heights, for CsF/Al, MgAg, Al, and Au interface are estimated as 0.9, 1.1, 1.45, and 1.76eV, respectively.

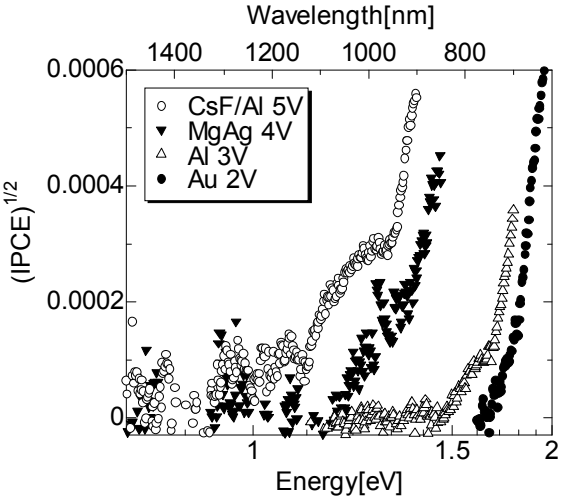

Fig. 2 IPE spectra of electron injection from various cathode materials to F8 under forward biasing.

Here, based on the current-voltage characteristics, we have estimated the electron injection barrier heights of 1.0±0.05 and 1.1±0.05 eV from the temperature dependence of thermal emission current (Schottky current) in our three layered device system with CsF/Al and MgAg cathode. And the temperature dependence of the current became very small when Al and Au were used as cathodes due to the large potential barrier for the thermal emission, and the tunneling current may become predominant. However, it was difficult to estimate the barrier height from Fowler-Nordheim plot [14] since the effective mass of electron in F8 was unknown and the measured current still showed some temperature dependent properties probably

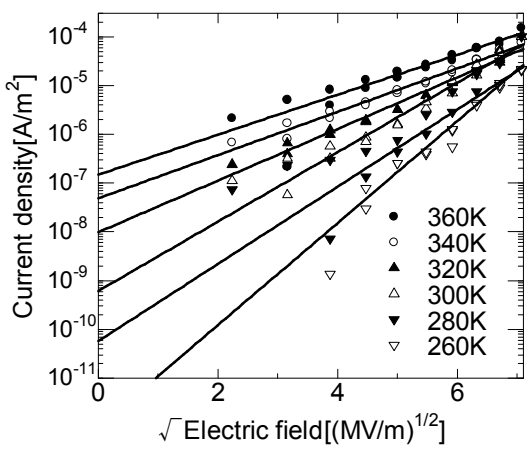

Fig. 3 I-V characteristics of ITO/TiO_2/ polyimide/ F8/ MgAg at various temperatures.

due to the leakage current through the defect level in the film. We therefore concluded that current analysis are useful when the barrier height is less than 1eV and not proper for estimating the barrier height higher than 1eV, while IPE measurement is preferable for estimating the barrier height between 0.7 and 2eV directly.

4. Conclusion

We have investigated the barrier height for electron injection at polyfluorene / electrode interface by internal photoemission measurement technique using three layered electron only device. The results were also correlated with Schottky current analysis and it was found that the current analysis gives the similar barrier height to IPE result only when the barrier height is lower than 1eV.

The influence of interfacial electronic states on the relationship between the work-function (or electro- negativity) of electrode and the measured barrier height would be discussed in the conference.

Acknowledgements

This work was partly supported by a Grant-in-Aid (No. 22360123) from the Ministry of Education, Culture, Sports, Science and Technology, Japan.

References

[1] H. Ishi et. al., Adv. Mater, 11 (1999) 605.
[2] S. T. Lee et al., Appl. Phys. Lett., 72 (1998) 1593.
[3] Tang et al., Appl. Phys. Lett., 87 (2005) 252110.
[4] J. X. Tang, C. S. Lee, and S. T. Lee, Proc. Int. Symp. Super-Functionality Organic Devices, IPAP Conf. Series 6 (2005) 6.
[5] W. Mönch, Appl. Phys. Lett., 88 (2006) 112116.
[6] V. V. Afanas'ev and A. Stesmans, J. Appl. Phys., 102 (2007) 081301.
[7] R. T. Tung, Materials Science and Engineering, R35, (2001) 1.
[8] Ch. Jonda, A. B. R. Mayer, W. Grothe, J. Appl. Phys., 85 (1999) 6884.
[9] I. H. Campbell and D. L. Smith, Appl. Phys. Lett., 74, (1999) 561.
[10] P. Sigaud, J. N. Chazalviel, F. Oaman, J. Appl. Phys., 89 (2001) 466.
[11] E. Itoh, S. Takaishi, K. Miyairi, Thin Solid Films, 518 (2009) 791.
[12] E. Itoh, Y. Ohmori, K. Miyairi, Jpn. J. Appl. Phys., 43 (2004)
[13] E. Itoh, M. Iwamoto, J. Appl. Phys., 81 (1997) 1790.
[14] R. H. Fowler, Phys. Rev., 38 (1931) 45.