Extended Abstracts of the 2010 International Conference on Solid State Devices and Materials, Tokyo, 2010, pp349-350

An Energy Harvest Current-Mode Demodulator for Low Power 3-D Stacked Retinal Prosthesis

Kouji Kiyoyama[1,2], Takafumi Fukushima[2], Mitsumasa Koyanagi[2], and Tetsu Tanaka[3]

[1]Department of Electrical and Electronics Engineering, Nagasaki Institute of Applied Science
536 Aba-machi, Nagasaki, 851-0193, Japan
Phone: +81-95-838-5197 Fax: +81-95-838-1126 E-mail: KIYOYAMA_Koji@NiAS.ac.jp
[2]New Industry Creation Hatchery Center, Tohoku University
[3]Department of Biomedical Engineering, Graduate School of Biomedical Engineering, Tohoku University

1. Introduction

With the rapid growth of biomedical implants, there is increasing necessary for the development of small and low power systems. Moreover, interest has been growing in visual prosthesis as the number of blind patients with intact optic nerves and damaged photoreceptor cells increases. Retinal prosthesis has been developed to restore the vision of patients via electrical stimulation of their remaining retinal cells [1-3]. These retinal prosthesis can be classified by general approach, either epiretinal or subretinal stimulation of retina. In epiretinal stimulation, the prosthesis device is placed on the surface of the retina while subretinal stimulation prosthesis is implanted in the space between the choroid and inner nuclear layer. Typically, image data and power are transmitted wirelessly from an extraocular unit to the intraocular unit in such systems. We have proposed a retinal prosthesis chip with three-dimensional stacked structure, which is an implantable device with the photo-sensor, stimulus current generator, and an electrode array [4]. In the fully implantable retinal prosthesis, we tune the parameters of the stimulus current waveform using the transmitted data from the outside of eyeballs via a wireless link.

In this paper, the proposed current-mode demodulator using clamped current which is usually disposed thermal energy at clamp circuit is described.

2. Retinal Prosthesis System

The conceptual diagram of the three-dimensional (3D) retinal prosthesis system is illustrated in Fig. 1. This system consists of an extraocular and an intraocular unit. In the proposed 3D stacked prosthesis chip the each layers with a different function, are stacked and electrically interconnected vertically using through-Si vias (TSVs) [4]. In this system, the retinal prosthesis is implanted on the surface of the retina, so the patients can employ their own lens and cornea, and shift the point of their gaze by moving the eyeball.

A block diagram of the prosthesis system is shown in Fig. 2. The extraocular unit consists of a modulator (Mod.), a demodulator (De-Mod.), a controller, a power supply controller and a memory for the parameters using stimulus current generation. The power supply controller is operated by monitoring an excessive power at the intraocular unit and limiting the power transmission at the extraocular unit [5]. In intraocular unit, a photo-detector receives a visual sense and converts it into image data from a signal processing block. The stimulus electrode array is contacted with the retina stimulates the retinal cells.

A current pulse waveform is usually used to stimulate retinal cells. Seven parameters, amplitude, duration, inter-phase delay between the cathodic and the anodic pulse, and period, are used to define the stimulus current. These parameters must be tunable for proper stimulation of the remaining retina cells because the optimum values of the parameters depend on the degree of damage in the retina of patients. The pixel circuit diagram for the vertically stacked retinal prosthesis is shown in Fig. 3.

3. Current-Mode Demodulator for Intraocular Unit

A wireless link would eliminate the problems associated with connectors while supporting the power supply and data requirements of an implanted device. The RF link interface consists of a rectifier (RECT), a voltage regulator and an amplitude shift keying (ASK) demodulator to decode modulated data from extraocular unit, as shown in Fig. 2.

The demodulator serves to detect the two modulation indexes of RF signal and output a digital representation of the envelope of ASK. In our system, the same coil pair is used to power supply and communication. In the conventional voltage-mode operation, the depth of 10% modulation indexes of ASK is lower than the 100%, so the signals of 10% modulation are harder to detect than that of 100% modulation.

A proposed demodulator is designed current-mode operation to decode data from modulated RF carriers. Fig. 4. shows the simplified block diagram of demodulator. The current-mode demodulator is used to detect the current which is usually disposed as thermal energy at clamp circuit. The proposed current-mode demodulator consists of a voltage clamp circuit with the clamped current detector (Mc0), a peak hold circuit, reference current generator, and current-mode comparator. The chain of three pMOS transistors of the clamp circuit acts as diodes. An increase in the forward-biased voltage V_C produces an increase in the clamped current as indicated by a quadratic curve. Therefore, the detected current has high amplitude when the low depth envelop of RF carriers. The current comparator converts the current signal of $I_{C\text{-}sig}$ to the output voltage $V_{C\text{-}sig}$. The positive peak current of $I_{C\text{-}sig}$ is stored by the peak-hold circuit and the digital data is extracted from the $I_{C\text{-}sig}$ by comparing it to the average of the peak values.

4. Results

The current-mode demodulator circuit is implemented with TSMC CMOS 0.18-μm technology. Fig. 5 shows micro photograph of the current-mode demodulator and full-wave rectifier. Fig. 6 shows the measurement waveforms of the transmitted DATA, RF received signal of the secondary coil, and the signals of the current-mode demodulator. The waveforms indicate the transmitted *DATA* of extraocular, clamped voltage V_C, and the output voltage $V_{C\text{-}sig}$ of intraocular, respectively. When the carrier frequency is 13.56-MHz and the modulation depth is 5%, the measured data rate is 106-kbps. The proposed demodulator successfully decodes the ASK signal from the detected current of the voltage clamp circuit.

5. Conclusions

This paper presents a current-mode demodulator and closed power control function for retinal prosthesis. The proposed demodulator has been implemented using a CMOS 0.18-μm technology. In measurement results, the demodulator can be decoding 106kbps with 13.56-MHz frequency carrier. The power dissipation in the clamp circuit can be reduced more than 50% using closed power control function. The proposed techniques are intended for wireless biomedical applications.

Acknowledgements

This research was partly supported by VLSI Design and Education Center (VDEC), the University of Tokyo in collaboration with Synopsys Inc., Cadence Design System Inc., and Mentor Graphics Inc. The LSI chip used in this study has been implemented in the academy chip fabrication program of TSMC Cybershuttle service.

References

[1] M.S. Huang, et al. *Vision Research*,(1999), Vol.39, pp.2569-2576.

[2] W. Liu, et al. *IEEE Journal of Solid-State Circuit*,(2000), Vol. 35, pp.1487-1497.

[3] J. Ohta, et al, *Japanese Journal of Applied Physics*,(2000), Vol.41, pp. 2322-2325.

[4] T. Tanaka, et al, *International Electron Device Meeting Technical Digest*, (2007), pp.1015-1018.

[5] K.Kiyoyama, et al., in *Proc. IEEE Biomedical Circuits and Systems Conf.*, Canada, (2007), pp.37-40.

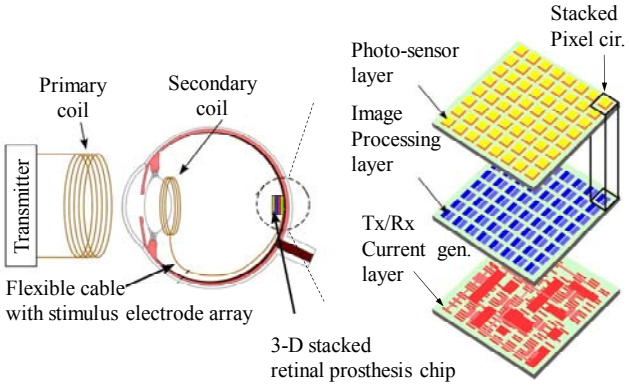

Fig.1. Conceptual diagram of the retinal prosthesis system.

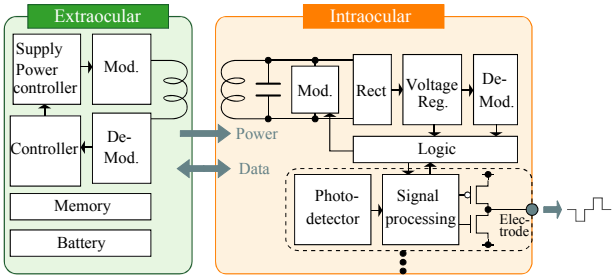

Fig.2. Block diagram of the proposed prosthesis system.

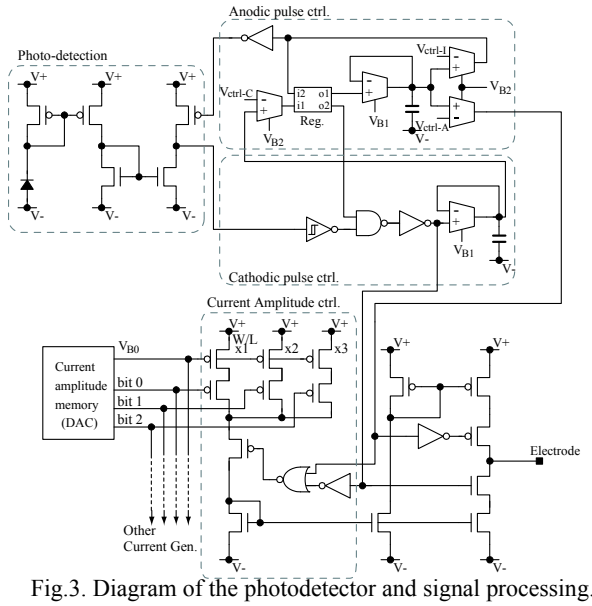

Fig.3. Diagram of the photodetector and signal processing.

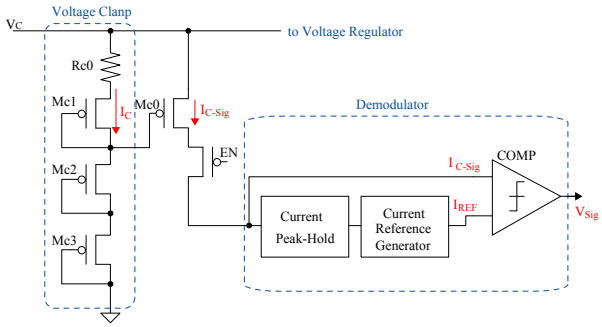

Fig.4. Simplified circuit diagram of demodulator.

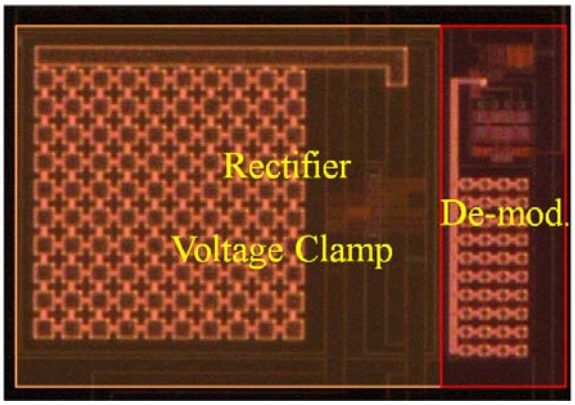

Fig.5. Microphotograph of the demodulator.

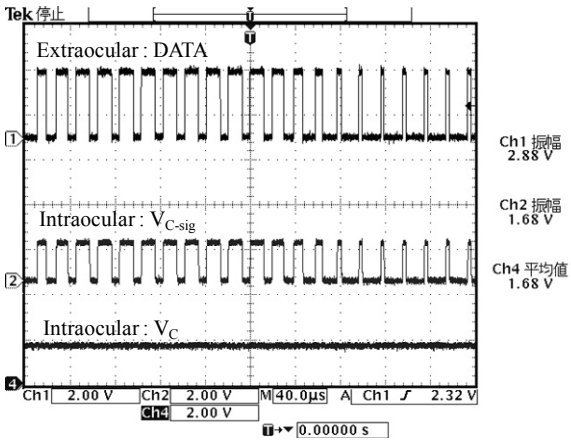

Fig.6. Measurement results of current-mode demodulator.