K-2-3

Extended Abstracts of the 2011 International Conference on Solid State Devices and Materials, Nagoya, 2011, pp1266-1267

Argon Ion Bombardment to Improve Contacts in Solution-Processed Single-Walled Carbon Nanotube Thin Film Transistor

Xun Yi[1], Gou Nakagawa[1], Hiroaki Ozawa[2], Tsuyohiko Fujigaya[2], Naotoshi Nakashima[2], and Tanemasa Asano[1]

[1] Department of Electronics, Kyushu Univ.
744, Motooka, Nishi-ku, Fukuoka 819-0395, Japan
Phone: +81-9-2802-3727 E-mail: yixun@fed.ed.kyushu-u.ac.jp
[2] Department of Applied Chemistry, Kyushu Univ.
744, Motooka, Nishi-ku, Fukuoka 819-0395, Japan

1. Introduction

SWCNTs are prospective candidate for yielding next generation electronic device. In particular, thin film transistor with solution-processed SWCNT as the channel material is of great interest in creating flexible electronics because it can be fabricated at low temperature and is not only flexible but also stretchable. However, the performance of solution-processed SWCNT TFT still needs to be improved for the application. Recent progress in chemistry to modify the surface of SWCNT made it possible to extract semiconducting SWCNT from a mixture of metallic and semiconducting SWCNTs and to produce highly purified solution[1]. Owing to the progress, it became possible to prepare TFTs having on/off current ratio close to 10^5. In fact, we have recently shown that a high on/off current is obtained by using 9,9-Dioctyfluorenyl-2,7-Diyl-Bipyridine (PFO-BPy) to produce semiconducting SWCNT solution[2]. However, on-state current should be improved for practical application. One possible causes of the limited on-state current is presence of a high parasitic resistance of source/drain contact.

Contact between metal and CNT have recently received much attention while the mechanism has not yet been clarified[3,4]. Recently, several groups were able to demonstrate their methods to lower the contact resistance between CNT and metal interface. For example, local joule heating process[5], Ni-catalyzed graphitization of amorphous carbon interface layer[6], and electron beam induced deposition of an amorphous carbon [7] were shown to be feasible. However, these methods need an annealing process with temperature higher than 200°C which severely limit the selection of materials that can be used on the organic substrate.

In this work, we investigate argon ion bombardment at room temperature to source/drain region of solution-processed semiconducting SWCNT TFT. Change in contact resistance is evaluated by using transmission line method of an array of contacts made of metallic SWCNT networks and Au electrodes.

2. Experimental

Figure 1 shows the AIB process. SWCNT was drop coated before lift-off process of Au electrodes. The remnant photoresist was used as a protection layer for SWCNT network in the channel region during AIB. Argon ions were bombarded to implant argon in the interface between Au and SWCNT through Au electrodes. Penetration of argon ions through Au layer was simulated using SRIM-2011 simulator. Figure 2 shows simulated argon profile for 30-nm-thick Au electrodes and 100 keV Ar^+ ions.

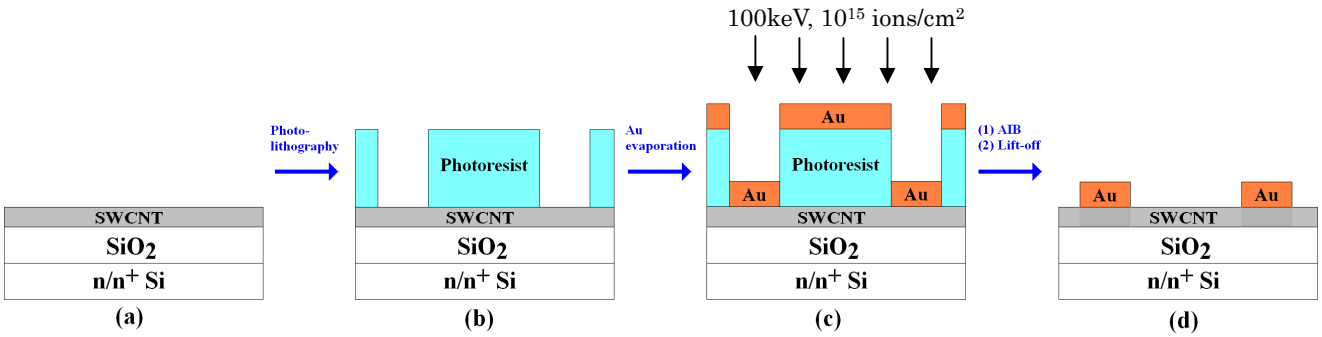

Fig. 1. Process of argon ion bombardment (AIB). (a)solution-processed SWCNT on Si/SiO2 surface; (b)patterned photoresist by photolithography; (c)after Au evaproration (d)lift-off process after argon ion bombardment.

To investigate effects of the use of AIB, switching characteristics of semiconducting SWCNT TFT were measured with and without AIB process comparatively. Semiconducting SWCNT networks was fabricated from PFO-BPy solubilizer[1,2]. Since the channel was covered with photoresist before AIB, we can not directly compare identical device before and after AIB process. Thus, the control group was fabricated using the same steps except for the AIB process. Ion dose was 10^{15} atom/cm^3. Figure 3 plotted the best performance among 40 devices with and

without AIB process. The TFT fabricated using AIB process achieves on/off current ratio over 10^5, while the TFT without AIB remains at 10^4. Change in on/off current ratio is clearly seen in the histogram of the ration shown in the inset of Fig. 3. The comparison of the two switching characteristics strongly suggests that improved on/off current is not due to decrease of off-state current but due to increase in on-state current.

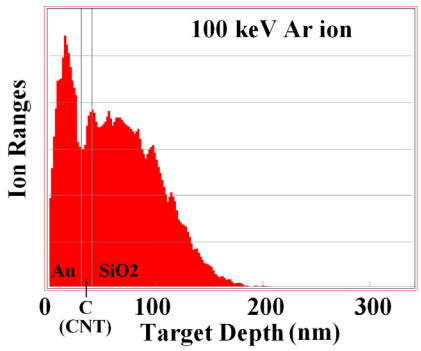

Fig. 2. Simulation result of 100-keV Ar ion penetrated through 30-nm-thick Au layer.

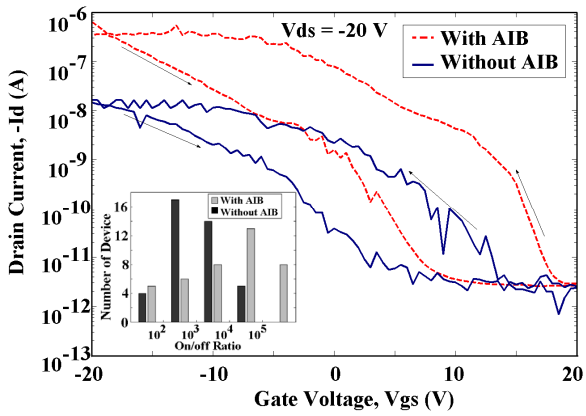

Fig. 3. The best performance of switching characteristic among 40 semiconducting SWCNT TFTs with and without AIB process respectively. The inset illustrates the deviation of on/off ratio.

In the following, contact resistance between metallic SWCNT networks and Au electrodes was evaluated by using transmission line method(TLM) with and without AIB respectively. TLM allows one to extract the specific contact resistance of a contact with lateral current flow[8]. It uses a series of contact with different spacings. Metallic SWCNT network was fabricated from solution process by using Sodium Dodecyl Sulfate as solubilizer[2]. The Y-intercept of fitting line in Fig. 4 indicates the value of contact resistance with theoretical channel length at zero spacing. It clearly shows that contact resistance between SWCNT networks and Au electrodes decreases more than 50% when we apply the AIB process mentioned above.

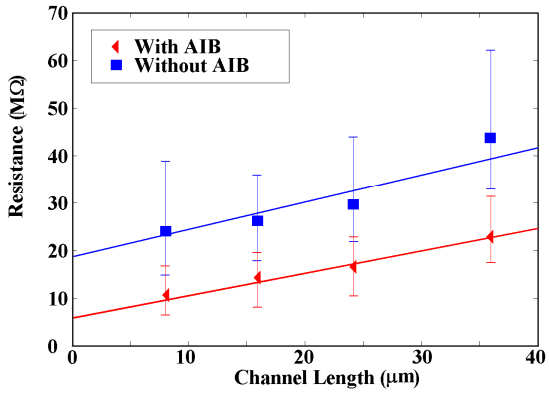

Fig. 4. Contact resistance between metallic SWCNT networks and Au electrodes was calculated by using TLM.

The mechanism of reduction in contact resistance remains unknown. Lim et al proposed that there is a junction bridged by a vacuum gap between metal and CNT[3]. Thus, this junction was fastened since the wettability between Au and SWCNT molecules was improved by implanted argon ion. On the other hand, AIB process is possible to make defect on CNT[9-11]. Moreover, conversions between carbon allotropes under AIB condition is also reported, e.g. from graphite to CNT or nanoshell[12]. We suggest that a graphite inter-layer between SWCNT network and Au electrodes was formed under AIB thus contact resistance was improved.

3. Conclusions

We investigated AIB process to reduce source/drain contact resistance of solution-processed semiconducting SWCNT TFT device. Results suggest that AIB effectively reduces contact resistance of SWCNT-metal interface and therefore increase on-state current of solution-processed SWCNT TFT. Moreover, AIB process provides a possibility to optimize the performance of future organic TFT by reducing contact resistance between organic materials and metal electrodes.

References

[1] H. Ozawa, et al.: Chem. Lett. 40 (2011) 239
[2] X. Yi, et al.: Jpn. J. Appl. Phys. 50 (2011) (to be published in No.7).
[3] S. C. Lim, et al.: Appl. Phys. Lett. 95 (2009) 264103.
[4] H. Lee, et al.: ACS Nano, 4 (2010)7612.
[5] L. Dong, et al.: J. Appl. Phys. 101 (2007)024320.
[6] Y. Chai, et al.: IEEE IEDM Tech. Dig., 2010, p. 9.2.1.
[7] K. Rykaczewski, et al.: Nanotechnology 21 (2010) 035202.
[8] H. H. Berger: Solid-State Electron. 15 (1972) 145.
[9] H. Lim, et al. : Microelectronic Engineering. 69 (2003) 81.
[10] M. M. Brzhezinskaya, et al. : Physics of the Solid State, 47 (2005) 772.
[11] B. Chen, et al. : Jpn. J. Appl. Phys. 45 (2006) 3680.
[12] Z. Wang, et al. : Appl. Phys. A. 71 (2000)353.