Extended Abstracts of the 2011 International Conference on Solid State Devices and Materials, Nagoya, 2011, pp160-161

Wireless Charge Based Capacitance Measurement Circuits with On-chip Spiral Inductor for RFID Biosensor

Boram Kim[1], Shigeyasu Uno[2] and Kazuo Nakazato[1]

[1] Nagoya Univ.
Furo-cho, Chikusa-ku, Nagoya, Aichi 464-8603, Japan
Phone: +81-52-789-2794 E-mail: r_kimu@nuee.nagoya-u.ac.jp
[2] Ritsumeikan Univ.
1-1-1 Noji-Higashi, Kusatsu, Shiga 525-8599, Japan

1. Gene-based Introduction

Point-of-care testing (POCT) has been received significant attention in recent years. The identification of individual DNA has advantages on the prevention of fatal disease and prescription of accurate medicine that suits individuals. Yusof *et, al.* reported DNA detection using 16 μm^2 planar electrodes with a differential capacitance-to-voltage conversion circuit [1]. The capacitance measurement is attractive because of simplicity, low-cost fabrication, and easy for array integration. However as the chip is soaked in electrolyte solution, electric wiring becomes obstructive. This can be solved by using the radio frequency identification (RFID) wireless communication technology (Fig. 1). The RFID in biomedical measurements has advantages due to low cost and simple measurement process and equipment. In this study, wireless measuring system of charge based capacitance measurements (CBCM) circuits fabricated using only standard CMOS process has been proposed and demonstrated for RFID biosensor.

2. RFID Circuitry with On-chip Spiral Inductor Tag Antenna

The block diagram of RFID CBCM circuitry is shown in Fig. 2. For the sampling clock of ΔΣ A/D converter, two-phase clocks are generated by inducted sine wave. We employ the operating frequency of 13.56 MHz that is suitable for the subaqueous measuring system. The output voltage signal of CBCM circuit is converted to digital signal and transmitted to reader. In this study, we simplify process and reduce cost by integrating chip and on-chip spiral inductor RFID tag antenna that is fabricated with metal interconnect layer of standard CMOS process [2]. Figure 3 shows (a) micrograph of the RFID chip fabricated using 1.2 μm, 2-metal, 2-poly standard CMOS technology and (b) equivalent circuit of on-chip spiral inductor with the outermost diameter d_{out} of 6.3 mm, innermost diameter d_{in} of 3 mm and number of turns of 8. Measured physical parameters of on-chip spiral inductor were L_2 = 312 nH, R_2 = 23 Ω, and C_{s2} = 269 pF, respectively. The RFID circuitry is located on the inside of the on-chip spiral inductor and size is 0.99 mm^2. The maximum modulation depth 3.5 was confirmed by the load modulation measurement.

3. Capacitance Sensor Design and Operation

The basic principle of CBCM is illustrated in Fig. 4. The output current corresponding to capacitance C_X can be obtained by repetition of charging and discharging. The output current at switching frequency f can be expressed as

$$I = fC_X V_{DD} \qquad (1)$$

where V_{DD} is supply voltage. Figure 5 shows a schematic of a fully differential capacitance sensor circuit [1]. The circuit was designed for measuring capacitances of 10 to 10^3 fF. The differential output voltage V_{out} is determined as

$$V_{out} = \frac{\Delta C_X (V_P - V_{CM}) A}{C_i (1 - A)} \qquad (2)$$

where ΔC_X ($=C_{X1}-C_{X2}$) is differential input capacitance, V_P and V_{CM} are two different reference voltages and A is operational amplifier (OA)'s gain. It can be confirmed that difference of capacitance is converted to output voltage.

4. Experimental Result

The poly-capacitor of fixed capacitance was used to confirm the circuit operation. Figure 6 shows the micrograph of fabricated CBCM circuit with poly capacitor. The three different capacitors (34, 141, 564 fF) C_{X1} are connected to three different CBCM circuits. The switching frequency is set to 100 kHz. The CBCM circuit and RFID chip that contained tag antenna are connected by external wiring. The measurement result is shown in Fig. 7. The dotted line is result of CBCM circuit output V_{out} and solid line is result of reader demodulation signal V_{dem}. It is evident that the reader output is high when the capacitance is high. It means that capacitance change according to the biological change can be detected by this RFID system.

5. Conclusions

This work focuses on wireless CBCM circuits for RFID biosensor. The small size, low cost and subaqueous operation RFID biosensor can be fabricated by integrating tag antenna, RFID tag and CBCM circuit using only standard CMOS technology. As a result of measurement, the capacitance change is observed wirelessly. This RFID system is expected to applied to be wireless measurement of CMOS biosensor signal and implantable sensor.

Acknowledgments

This work is supported by a Grand-in-Aid for Scientific Research(s) from the Ministry of Education, Culture, Sports, Science and Technology (20226009). The fabrication of CMOS chips was supported by ON semiconductor Technology Japan, Ltd., and VLSI Design Education Center (VDEC), the Univer-

sity of Tokyo in collaboration with Cadence Design Systems, Inc.

References

[1] Y. Yusof *et al.*, Jpn. J. Appl. Phys. **49** (2010) 01AG05.

[2] B. Kim *et al.*, : presented ISAP 2010, *Int. Symp. on Antennas and Propagation* (2010) 60.

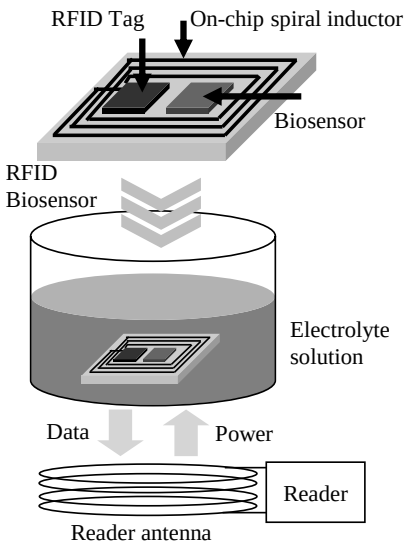

Fig. 1 RFID biosensor measuring system. The sensing signal by biosensor soaked in electrolyte solution is wireless transmitted by using RFID technology.

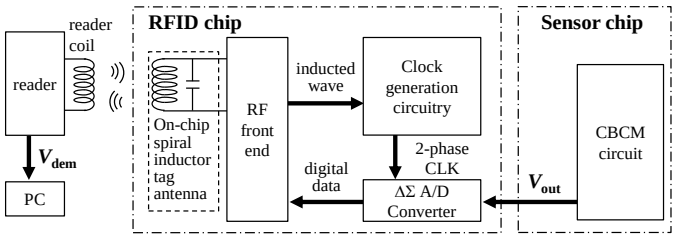

Fig. 2 Block diagram of RFID CBCM chip. The chips were fabricated using only standard CMOS technology.

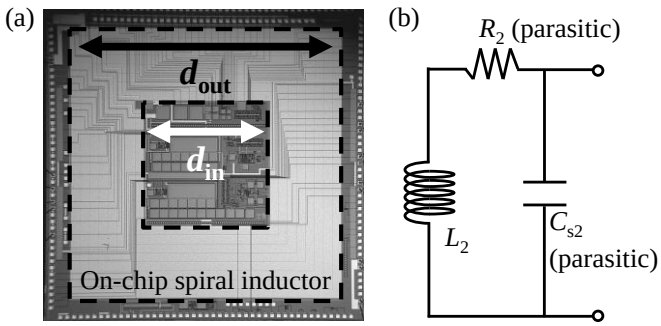

Fig. 3 (a) Micrograph of chip fabricated in 1.2 μm standard CMOS process.
(b) The equivalent circuit of on-chip spiral inductor.

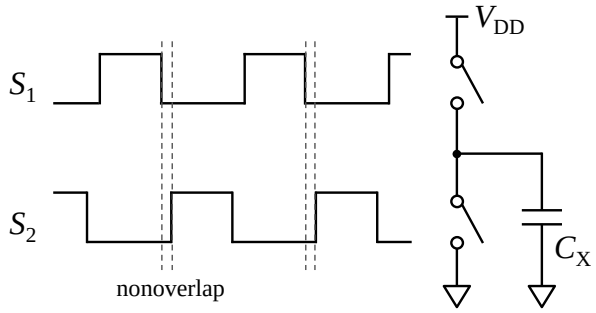

Fig. 4 Basic CBCM circuit.

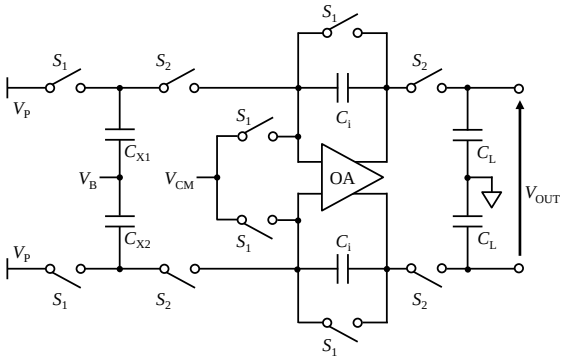

Fig. 5 Schematic of fully differential capacitance sensor.

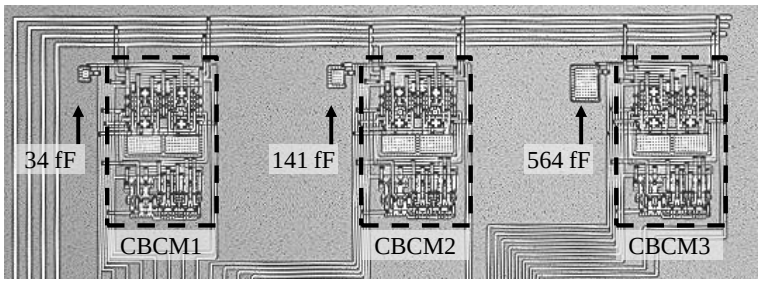

Fig. 6 Micrograph of the CBCM circuit with poly capacitor

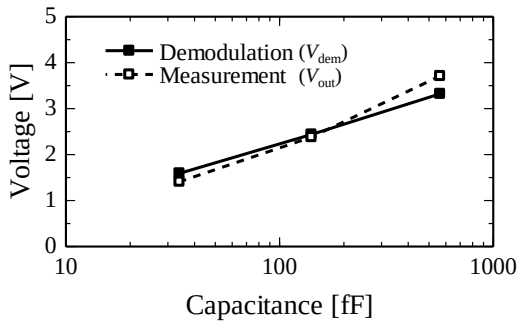

Fig. 7 Result of wireless capacitor measurement. The demodulated signal of reader output signal V_{dem} is high when the capacitance is high.