Extended Abstracts of the 2012 International Conference on Solid State Devices and Materials, Kyoto, 2012, pp544-545

Strongly enhanced four-wave mixing signal from GaAs/AlAs cavity with InAs QDs embedded in strain-relaxed barriers

Yukinori Yasunaga, Hyuga Ueyama, Ken Morita, Takahiro Kitada and Toshiro Isu
Center for Frontier Research of Engineering, Institute of Technology and Science, The University of Tokushima
2-1, Minami-Josanjima-Cho, Tokushima 770-8506, Japan
Phone: +81-88-656-7671 E-mail: yasunaga@frc.tokushima-u.ac.jp

1. Introduction

The novel wavelength conversion devices based on the four-wave-mixing (FWM) are attractive for ultrahigh-speed optical processing. A coupled optical microcavity system with nanostructured materials having the large third-order nonlinearity is a good candidate for the planar-type device with the high conversion efficiency. Recently, we have demonstrated a planar-type optical Kerr gate switch based on a GaAs/AlAs multilayer cavity with InAs quantum dots (QDs) embedded in strain-relaxed $In_{0.35}Ga_{0.65}As$ barriers (QD cavity) [1-3]. The strong internal light electric field due to the cavity effects yields drastic enhancement of nonlinear phase shift in the half-wavelength (λ/2) cavity layer, which results in strongly enhanced optical Kerr signal. In addition, the InAs QDs inserted into the λ/2 cavity layer have excellent nonlinearity around 1.55 μm because optical absorption in the QDs is extended to the wavelength range of 1.35-1.65 μm by using strain-relaxed $In_{0.35}Ga_{0.65}As$ barriers [4]. Another characteristic feature of the QDs is the fast decay (~ 18 ps) of the photogenerated carriers into the nonradiative centers arising from the crystal defects related to the lattice strain relaxation [4], which is useful for the reduction of the pulse pattern effect under high-bit-rate operation. In this paper, FWM signals from the QD cavity were studied by the time-resolved pump-probe measurements. The strongly enhanced FWM signals were obtained compared with those of the GaAs cavity sample which had no QDs in the λ/2 cavity layer.

2. Multilayer cavity samples

The QD cavity structure (Fig. 1) was grown on a semi-insulating (100) GaAs substrate by solid-source MBE. The λ/2 cavity layer was sandwiched between 13-period top and bottom GaAs/AlAs (111 nm/130 nm) distributed Bragg reflector (DBR) multilayers. The two layers of self-assembled InAs QDs (3.4 monolayer) embedded in strain-relaxed $In_{0.35}Ga_{0.65}As$ barriers were inserted in the λ/2 cavity. The average height and density of the QDs in each layer were estimated to be 8 nm and 4×10^{10} cm^{-2}, respectively. Relaxation of the lattice-strain was induced in the bottom $In_{0.35}Al_{0.65}As$ (20 nm) nucleation layer, and the upper $In_{0.35}Al_{0.65}As$ layer was also grown for the structural symmetry. The reference sample (GaAs cavity) in which the λ/2 cavity shown in Fig. 1 was replaced by a 222-nm-thick GaAs layer was also grown on the (100) GaAs substrate. Before optical measurements, the GaAs substrates were completely removed by mechanical polishing and selective wet etching. In the optical transmission spectrum of each sample, a single cavity mode was clearly observed in the center of the high reflection band. The cavity mode wavelengths of the QD and GaAs cavity samples were 1.46 and 1.54 μm, respectively. The quality factor and transmittance peak of the cavity mode (Q ~ 350 and T_{cavity} ~ 0.3) of the QD cavity was smaller than those (Q ~ 580 and T_{caivty} ~ 0.6) of the GaAs cavity because of the optical absorption in the resonant InAs QDs.

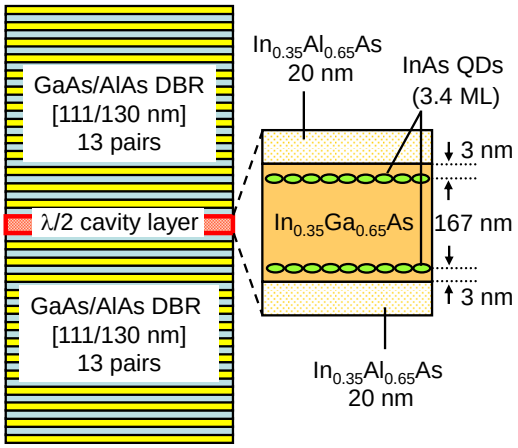

Fig. 1 Structure of the GaAs/AlAs multilayer cavity with InAs QDs embedded in strain-relaxed barriers.

3. Time-resolved FWM measurements

Time-resolved FWM measurements were performed at room temperature using 100 fs laser pulses with a 100 kHz repetition rate. Figure 2 shows the experimental setup for the FWM measurements. The spectral width of the laser pulse was ~ 35 nm and the center wavelength was tuned in the cavity mode of each sample. The laser pulses were divided into k_1 and k_2 pulses by a beam splitter and both pulse beams were focused on an area of about 140 μm diameter of the sample surfaces. Incident powers (I_{k1} and I_{k2}) of the k_1 and k_2 pulses were the same and they were varied from 0.3 to 2 mW. A relative delay time (Δt) of the k_1 pulse was varied using a mechanical delay stage. The k_2 beam was chopped with 400 Hz and a lock-in amplifier was used for the signal detection. In order to detect only the FWM signal ($2k_1$ - k_2) which was spatially separated from the k_1 and k_2 pulses, a small aperture with a diameter of 3 or 5 mm was placed between the collimating lens and cooled InGaAs photodiode detector.

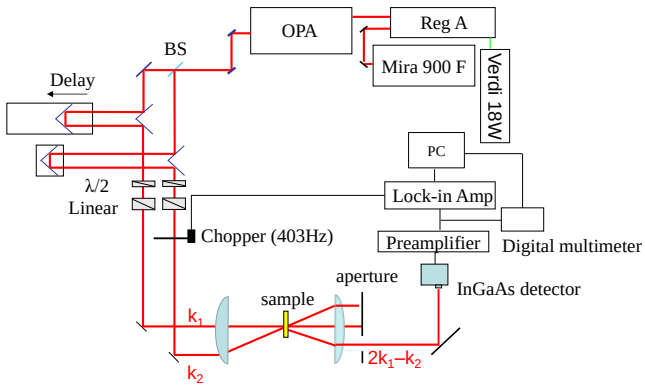

Fig. 2 Experimental setup for the FWM measurements.

Figure 3 shows Δt dependent FWM signals measured for the QD and the GaAs cavity samples when $I_{k1} = I_{k2} =$ 0.8 mW. Both samples exhibited ultrafast response less than 1 ps, which is useful for ultrahigh-speed optical processing. The rise and decay times (0.19 and 0.38 ps, respectively) of the FWM signal response observed for the QD cavity can be well explained by the photon lifetime (0.31 ps) of the multilayer cavity. Note that the response time was much smaller than the decay time (~18 ps) of photogenerated carriers in the QDs. This indicates that the FWM response is not restricted by the temporal behavior of the phtogenerated carriers in the resonant QDs. The most prominent feature in Fig. 3 is that the FWM signal intensity of the QD cavity is 50 times larger than that of the GaAs cavity, indicating that the FWM in the multilayer cavity structure is markedly enhanced by the large optical nonlinearity of the resonant InAs QDs.

In Fig. 4, the peak intensities of the FWM signals from the QD and GaAs cavity samples are plotted as a function of the excitation power I (= I_{k1} = I_{k2}). The enhancement of the FWM signal intensity is more significant for the lower excitation power regime. In the excitation power below 0.6 mW, the FWM signal intensity of the QD cavity was almost two orders of magnitude larger than that of the GaAs cavity. Strongly enhanced FWM in the QD cavity at the low excitation power is one of the most desirable characters for the planar-type wavelength conversion devices based on the coupled optical microcavity system.

4. Conclusions

Time-resolved FWM signals from the QD and GaAs cavity were measured using 100 fs laser pulses. Both samples exhibited ultrafast response less than 1 ps, which were limited by the photon lifetime in the multilayer cavity. The FWM signal intensity of the QD cavity was almost two orders of magnitude larger than that of the GaAs cavity in the low excitation power below 0.6 mW. These results indicate that InAs QDs embedded in strain-relaxed barriers are promising as the nonlinear materials for the novel wavelength conversion devices using FWM in the coupled optical microcavity system.

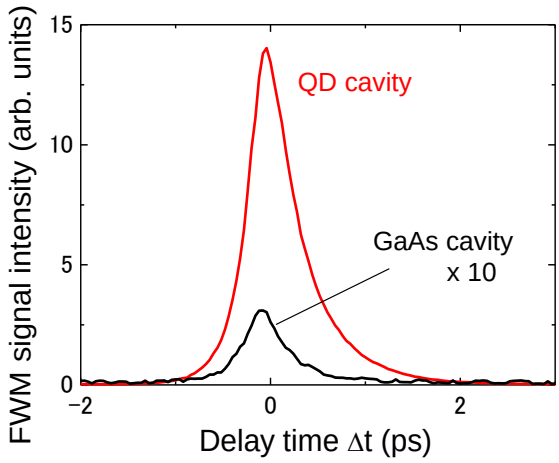

Fig. 3 Time-resolved FWM signals for the QD-cavity and GaAs cavity measured at $I_{k1} = I_{k2} = 0.8$ mW.

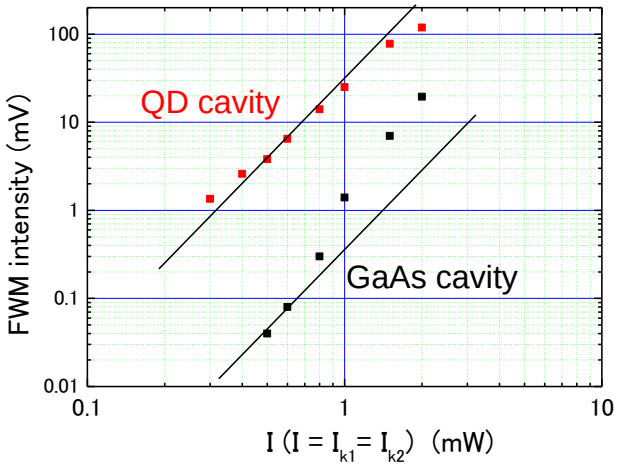

Fig. 4 Peak intensities of the FWM signals from the QD and GaAs cavity samples plotted as a function of the excitation power.

References

[1] T. Kitada, T. Kanbara, K Morita, and T. Isu: Appl. Phys. Express 1 (2008) 092302.
[2] K. Morita, T. Takahashi, T. Kitada, and T. Isu: Appl. Phys. Express 2 (2009) 082001.
[3] T Takahashi, K. Morita, T. Kitada, and T. Isu, Jpn. J. Appl. Phys. 49 (2010) 04DG02.
[4] T. Kitada, T. Mukai, T. Takahashi, K. Morita, and T. Isu: J. Cryst. Growth 311 (2009) 1807.