Extended Abstracts of the 2013 International Conference on Solid State Devices and Materials, Fukuoka, 2013, pp904-905

A Low-Power Capacitor-Less LDO Regulator with Adjustable Charge Injection Technique for OOK Transmitter

Ippei Akita[1], Shochi Asai[1], and Makoto Ishida[1,2]

[1] Toyohashi University of Technology, Toyohashi, 441-8580, Japan
[2] Electronics-Inspired Interdisciplinary Research Institute (EIIRIS), Toyohashi, 441-8580, Japan
Phone: +81-532-44-6746, E-mail: ippei.akita@ieee.org

Abstract

This paper presents a low-power low-dropout (LDO) regulator for OOK transmitters. The designed regulator does not need external capacitors, and a required on-chip capacitor can also be reduced as less than 1 pF. The fast load response is guaranteed by the proposed adjustable charge injection (ACI) technique which uses timing information of a transmitted data signal. The designed regulator with the ACI technique has been fabricated in a standard 180-nm CMOS process. and achieves 100-mV_{pp} dropout voltage ripple when Tx data outputs. The measured power consumption is 65 μA at a power supply of 1.8 V.

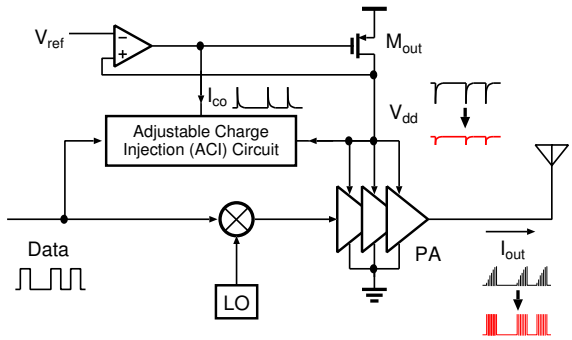

Fig. 1 OOK transmitter and LDO regulator with the proposed adjustable charge injection (ACI) technique.

1. Introduction

An ultra-low-power low-dropout (LDO) voltage line regulator is needed to stabilize supply voltage of power electronic circuits, especially power amplifiers (PAs) for biomedical wireless systems based on on-off keying (OOK) [1]. In such a low-power regulator, a fast transient response for a rapid change of load in PAs and no use of large external/on-chip capacitors are required. Although a conventional regulator has achieved a few micro-watt operation, a large on-chip capacitor is required [2]. On the other hand, some techniques have realized a fast load response [3][4]. However, additional circuits are needed to accelerate the response, resulting in an increase of static current.

This paper proposes a digital calibration technique to accomplish both a fast transient response for a load change and a low-power operation in an LDO regulator for a PA of OOK transmitters. The technique utilizes timing information of OOK data to compensate the transient response and it does not need static current and on-chip capacitor, resulting in low-power and small-area implementation.

2. Adjustable Charge Injection (ACI) Technique for Fast Load Response

Fig. 1 shows a block diagram of an OOK transmitter with an LDO regulator using a proposed digital calibration technique; the adjustable charge injection (ACI) circuit. In a general regulator for OOK transmitter, if the loop bandwidth of the regulator is less than the data rate, the output signal into the antenna is distorted by a poor supply capability of the regulator, resulting in low output power of the transmitter. Although several techniques to enhance its equivalent loop bandwidth have been proposed, an additional feedforwad path is required, which leads to an increase of current dissipation.

The ACI circuit in Fig. 1 can solve such a trade-off between fast load response and power consumption. In such an OOK transmitter, the envelope of the transmitted signal to the antenna is the same with the waveform of the data signal. In addition, the load change and the distortion arise when the data changes from low to high state. Therefore, if an impulse current I_{co} is applied to the gate of the output MOSFET M_{out} in the regulator, the response of V_{dd} would be improved. Such a current I_{co} can be easily generated by use of the data signal, and in this case, the timing of the injected current should be synchronized with an actual load change. The synchronization is realized by monitoring the dropout voltage V_{dd}.

Fig. 2 shows the proposed ACI circuit including a digitally-controlled delay line, an impulse generator, a detector, and a controller. The delay line receives the data signal and the delayed data signal, Data_P, is fed to the impulse generator consisting of an RC high-pass filter and a MOSFET. Therefore, an injected impulse current I_{co} can be generated and it assists the drive capability of M_{out}.

The number of the delay elements is automatically adjusted by the controller according to the result of the detector which senses the ripple voltage of V_{dd}. The adjustment of the tim-

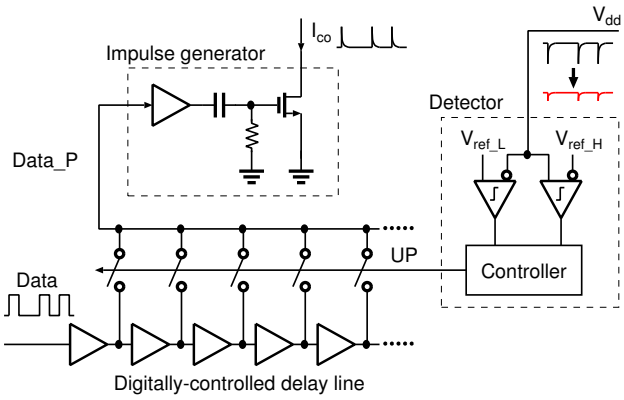

Fig. 2 Block diagram of the proposed ACI circuit.

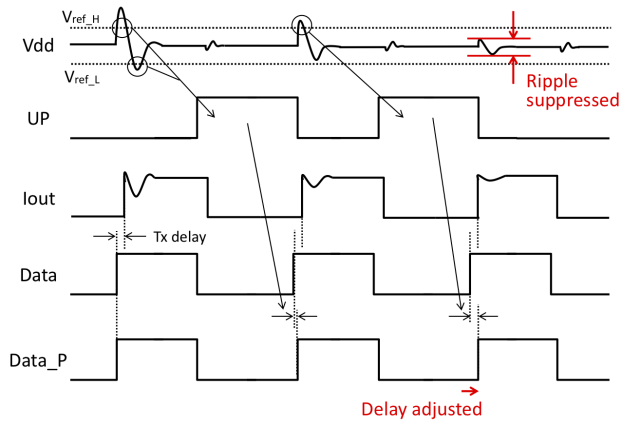

Fig. 3 Timing diagram of the calibration scheme.

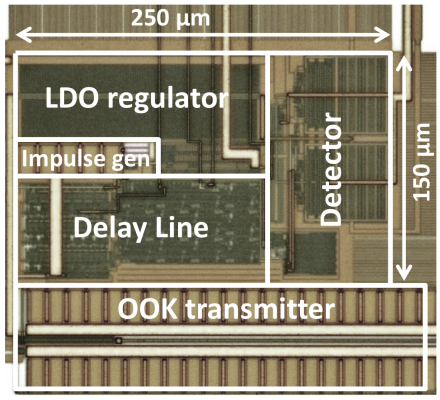

Fig. 4 Chip microphotograph.

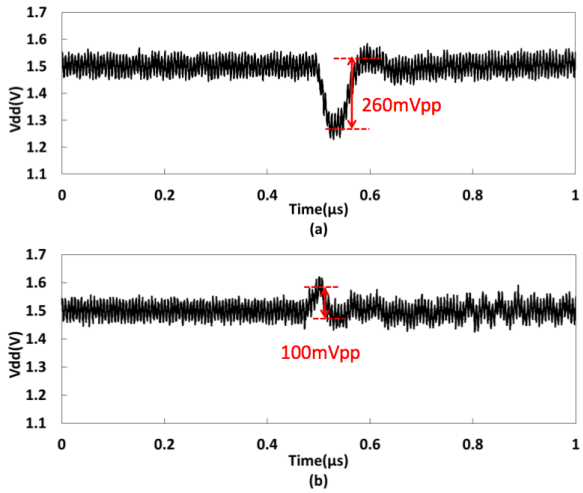

Fig. 5 Measured output voltage of the LDO regulator when the OOK signal is output; (a) without and (b) with the proposed ACI technique.

ing between I_{co} and load change of the PA is performed during an additional calibration mode, which could be generally a preamble period outputting a known bit stream excluding the RF carrier. As shown in Fig. 3, if the instance of the timing of the PA output and the charge injecting timing are not synchronized, the ripple of V_{dd} exceeds threshold voltages V_{ref_L} and V_{ref_H}. In this case, the comparators are activated, and then the controller outputs a signal, UP, to increase the delay time of Data_P. If the ripple becomes within the threshold voltages, the UP signal does not generated and the calibration is finished. Simulation results show that the calibration scheme can adjust the delay time appropriately and the calibration time is less than 0.2 msec.

3. Results

The prototype regulator has been fabricated in a 0.18-μm CMOS technology with 0.5-V V_{th} and high-resistivity resistors and MIM capacitors. The chip microphotograph of the implemented LDO regulator is shown in Fig. 4, the die area of which is 250 μm $\times$ 150 μm. The applied supply voltage of the regulator is 1.8 V and a dropout voltage of 1.5 V is output as V_{dd}.

Fig. 5 shows measured dropout voltage V_{dd} when the transmitter is activated. In this case, the timing of the injected impulse current I_{co} is adjusted by the proposed digital calibration scheme, and thus an improvement of the ripple can be confirmed; from 260 mV_{pp} to 100 mV_{pp} on average.

The current consumption of the regulator core is 65 μA and the on-chip capacitance is less than 1.0 pF. In addition, compared to conventional techniques, the proposed ACI in the regulator does not need a static current for realizing the fast response because the detector can be turned off while transmitting. Therefore, the proposed ACI technique can enable a low-power and a small active area realization.

References

[1] D. C. Daly and A. P. Chandrakasan, IEEE J. Solid-State Circuits, **42** (2007) 1003.

[2] S. S. Chong and P. K. Chen, IEEE Trans. Circuits Syst. I, Reg. Papers, **60** (2013) 1072.

[3] C. Lovaraju, A. Maity, and A. Patra, in Proc. *Int. Conf. on VLSID*, (2013) 130.

[4] J. Guo, K. N. Leung, IEEE J. Solid-State Circuits, **45** (2010) 1896.