Extended Abstracts of the 2016 International Conference on Solid State Devices and Materials, Tsukuba, 2016, pp495-496

K-4-04

Fabrication of a Schottky diode with direct deposition of multilayer graphene on n-GaN by solid phase reaction

Md. Sahab Uddin[1] and Kazuyoshi Ueno[1, 2]

[1] Graduate School of Engineering and Science, Shibaura Institute of Technology, Koto, Tokyo 135-8548, Japan
[2] Research Center for Green Innovation, Shibaura Institute of Technology, Koto, Tokyo 135-8548, Japan
E-Mail: nb14502@shibaura-it.ac.jp

Abstract

Direct deposition process of multilayer graphene (MLG) on n-GaN by solid phase reaction was demonstrated for the first time for the fabrication of Schottky diode. The growth conditions were optimized for deposition of the crystalline and uniform MLG films on n-GaN using heat sputtering. The characterizations made by Raman Spectroscopy, laser microscope and SEM revealed that the MLG films were crystalline and uniform. The MLG-GaN Schottky diode was fabricated with optimized deposition of MLG on GaN. The diode shows rectifying behavior with barrier height of 0.71 eV.

1. Introduction

Graphene is expected as an alternative Schottky metal on n-GaN, and its high barrier height, low reverse leakage current and high rectification ratio have been reported [1]. Several papers have been reported on formation and electrical properties of graphene-GaN Schottky diodes [1,2]. However, for most of the device applications, graphene or MLG synthesized on metal substrates required transfer process; which may degrade the device performance [1]. Recently, a number of studies focusing on fabrication of MLG directly on GaN substrate by thermal CVD have been reported [3,4]. However, the deposition temperature was high (900ºC) and MLG crystallinity was not good (G/D < 1). To overcome this, we proposed a new technique of annealing sputtered amorphous carbon (C) with cobalt (Co) as catalyst layer by solid phase reaction which features heat sputtering during deposition of C and Co by magnetron sputtering to improve the crystallinity and uniformity of MLG. We succeeded in improving the crystallinity and uniformity of MLG on n-GaN at comparatively lower temperature by our proposed method. The MLG-GaN Schottky diode was fabricated with direct deposition of MLG, our new method. The electrical characteristics of the fabricated diode is also presented in our report.

2. Experimental method

The process flow of MLG fabrication and Schottky diode fabrication is shown in Fig. 1(a) and 1(b), respectively. The n-GaN ($n = 6 \times 10^{16}$ to 1×10^{17} cm^{-3}, 1 µm) substrate was cleaned ultrasonically with TMAH, IPA and ultrapure water. Then the substrate was dipped in concentrated HCl for 3 minutes to remove native oxides. Amorphous C and Co layer of thickness 40 and 160 nm were deposited on GaN substrate by magnetron sputtering at room temperature and various temperatures between 100 to 200 ºC. The flow rate of Ar was 20 sccm and the pressure was 1 Pa with a base pressure of 7×10^{-4} Pa. The sputtered samples were annealed in a tube furnace at temperatures ranging from 600 to 750 ºC in vacuum of 5×10^{-3} Pa. The circular Schottky contact of diameter 2 mm was defined by a window metal mask. Gold (Au) layer of thickness 150 nm on Schottky contact was deposited by vacuum evaporation. Finally, ohmic contact with Ti/Al of thickness 35 /115 nm was made by magnetron sputtering.

The structural properties of the MLG films were analyzed by Raman spectroscopy using an exciting laser of wavelength 532 nm. The surface of the films were observed by scanning electron microscope (SEM) and a laser microscope. The I-V characteristics was measured by a semiconductor parameter analyzer (HP 4155A).

3. Results and discussion

Figures 2(a) and 2(b) show the comparison of Raman spectra between MLG films annealed at same temperatures with C and Co deposition made at room temperature and 150 ºC sputtering. Figure 3 shows the comparison of G/D ratios among MLG films annealed at various temperatures for room temperature, 150 ºC and 200 ºC heat sputtering. From Figs. 2 and 3, it is seen that, the MLG crystallinity which is determined by G/D peak intensity ratio, was improved by applying heat sputtering of C and Co as indicated by higher G/D ratios.

For device applications, the uniformity of MLG is required. Figure 4 shows the surface SEM images of the samples annealed at various temperatures for (a) room temperature and (b) 150 ºC sputtering. From Fig. 4 (a), it is seen that for room temperature sputtering, the surface of the MLG films were not uniform over the substrate. The non-uniformity should be due to the expansion co-efficient difference between GaN and Co. When the annealing is made at higher temperatures, GaN and Co should be expanded in different amount, as a result non-uniformity appeared. From Fig. 4 (b), it is seen that the surface uniformity was improved significantly after applying 150 ºC heat sputtering. When the sputtering of C and Co were made at 150 ºC and the annealing temperatures were 600 ºC and 650 ºC, the surface of MLG films are almost uniform.

Considering the G/D ratio and the surface uniformity, optimized process condition was decided as follows. Although, the G/D ratio for 150 ºC heat sputtered and annealed at 700 ºC sample and 200 ºC heat sputtered and annealed at 750 ºC sample are higher, the surface uniformity degrades as can be

seen from Fig. 4(b) and SEM image of 200 °C sputtered samples (not shown). The laser microscope image of 150 °C heat sputtered sample annealed at 650 °C (shown inset of Fig. 4) revealed that except some wrinkles, the surface is almost smooth. The crystallinity as determined by G/D peak intensity ratio for 650 °C is higher than that annealed at 600 °C as shown in Fig. 2(b). Therefore, heat sputtering at 150 °C and annealing at 650 °C is the optimized condition for MLG growth on n-GaN. We used this condition for deposition of MLG for diode fabrication in next step.

Figure 5 shows the I-V characteristics of the fabricated Schottky diode in (a) linear and (b) logarithm scale. The device shows rectification with barrier height of 0.71 eV. The ideality factor was found to be 1.72 and 1.2 as measured by thermionic emission model and using Cheung's method [5]. The series resistance was calculated as 14.8 kΩ by using Norde function [1]. The reverse leakage current density was 7.8 x 10^{-7} A/cm^2 at -2 volts. The results are in good agreement with available reported values [1, 2].

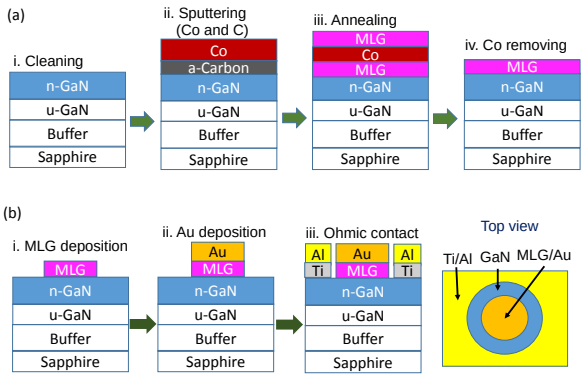

Fig. 1. Process flow of (a) MLG fabrication on GaN and (b) Schottky diode fabrication.

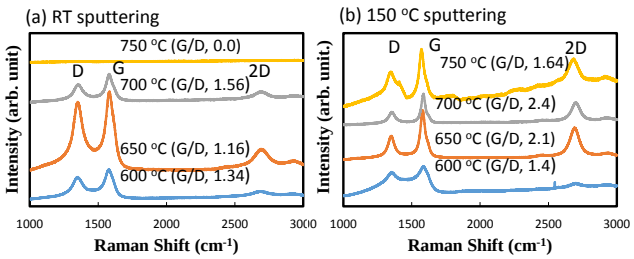

Fig. 2. Comparison of Raman spectra of MLG films on GaN annealed at different temperatures at (a) room temperature and (b) 150 °C heat sputtering.

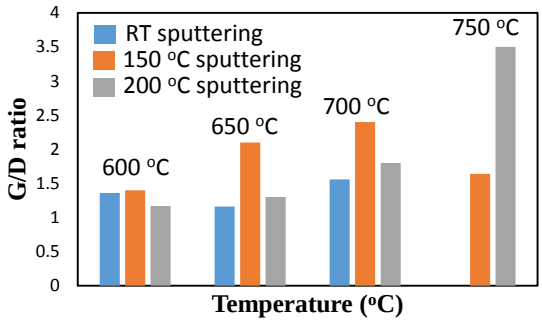

Fig. 3. Comparison of G/D intensity ratio of MLG films annealed at different temperatures for room temperature, 150 °C and 200 °C heat sputtering.

4. Conclusions

We fabricated transfer free MLG films directly on GaN substrate with improved crystallinity and uniformity at comparatively lower temperature by our proposed method. We also succeeded in fabricating an MLG-GaN Schottky diode with direct deposition of MLG by our method. Our findings show that solid phase reaction process with heat sputtering of C and Co can be a promising technique to fabricate an efficient MLG-GaN Schottky device.

Acknowledgements

This research is financially supported by Research Center for Green Innovation, SIT Japan.

References

[1] S. Kim et al., Nano Research **8** (2015) 1327.

[2] S. Tongay et al., Appl. Phys. Lett. **99** (2011) 102102.

[3] Z. Yun et al., Chin. Phys. B **23** (2014) 096802.

[4] B. Wang et al., Front. Phys. **11** (2016) 116803.

[5] Z. khurelbaatar et al., Journal of Alloys and Compounds **614** (2014) 323.

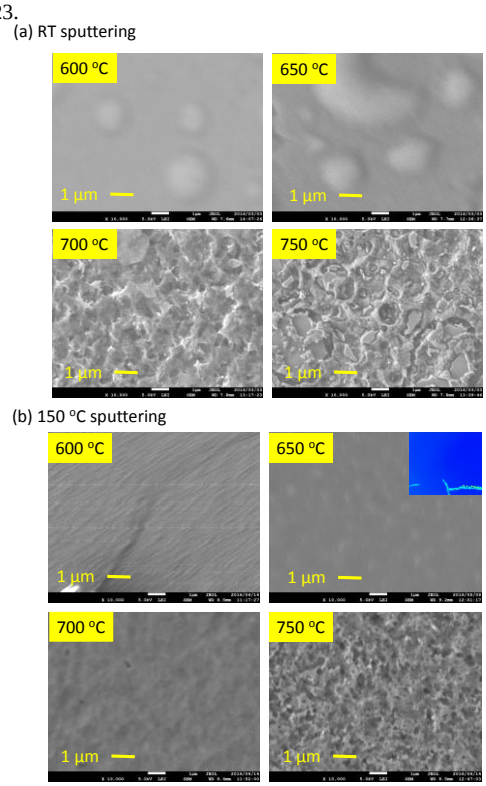

Fig. 4. SEM images of the surface uniformity of MLG films on GaN annealed at different temperatures for (a) room temperature and (b) 150 °C heat sputtering (Inset shows 5µm x 5 µm laser microscope image).

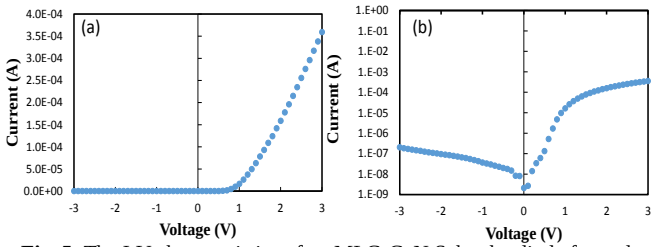

Fig. 5. The I-V characteristics of an MLG-GaN Schottky diode formed on n-GaN, in (a) linear and (b) logarithm scale.