Extended Abstracts of the 2016 International Conference on Solid State Devices and Materials, Tsukuba, 2016, pp673-674

A Novel Noise Analysis Method with Multi-physics Simulation for Capacitive CMOS-MEMS Inertial Sensor System

Toshifumi Konishi[1], Daisuke Yamane[2], Hiroyuki Ito[2], Shiro Dosho[2], Noboru Ishihara[2], Hiroshi Toshiyoshi[3], Kazuya Masu[2], and Katsuyuki Machida[1]

[1] NTT Advanced Technology Corporation
3-1 Wakamiya, Morinosato, Atsugi, Kanagawa 243-0124, Japan
Phone: +81-46-250-3682 E-mail: toshifumi.konishi@ntt-at.co.jp
[2] Tokyo Institute of Technology
4259-S2-14 Nagatsuta, Midori-ku, Yokohama, Kanagawa 226-8503, Japan
[3] Research Center for Advanced Science and Technology, The University of Tokyo
4-6-1 Komaba, Meguro-ku, Tokyo 153-8904, Japan

Abstract

This paper describes a novel noise analysis method to realize a highly sensitive capacitive CMOS-MEMS inertial sensor system. We propose electrical and mechanical noise models to simultaneously calculate with a multi-physics simulation on a conventional circuit design environment. Proposed models are translated into Verilog-A, and embedded into circuit modules. Transient and AC noise characteristics of a CMOS-MEMS inertial sensor are analyzed with the proposed models. Results of the simulation are consistent with those of experiments.

1. Introduction

Recently, MEMS (microelectromechanical systems) inertial sensors are used in various fields, and required to have wide range of detection, small foot print, and high sensitivity [1]. To solve the above issues, we have proposed an integrated capacitive CMOS (complementally metal oxide semiconductor)-MEMS inertial sensor which has micromechanical structures fabricated by multi-layer metal with high density material, and implemented onto the sensor LSI (large scale integrated circuits) [2, 3]. In general, the higher the sensitivity, the more important the noise level is [4, 5]. Various noise analysis results have been previously reported [6, 7] but there is no report that deals with the total noise analysis method for the CMOS-MEMS inertial sensor system. Thus, it is necessary for the design of low noise CMOS-MEMS system to simultaneously analyze the influence of the various mechanical and electrical noise sources as shown in Fig. 1. Therefore, we propose a novel noise analysis method for a highly sensitive capacitive CMOS-MEMS inertial sensor system.

In this paper, we first investigate the noise equivalent models with MEMS and electrical noise sources in order to translate the models to Verilog-A compatible hardware description language on a conventional circuit design environment. Next, transient and AC noise characteristics are demonstrated with multi-physics simulation. Finally, simulation results are compared with the experimental results of a fabricated CMOS-MEMS inertial sensor.

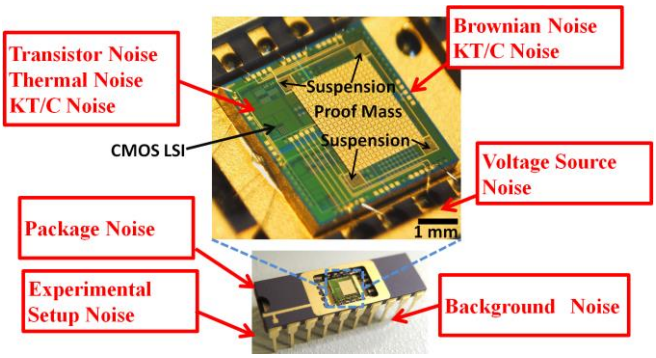

Fig. 1 Optical microscope image and assumed noise sources of the capacitive CMOS-MEMS inertial sensor system [3]. (A shield lid is removed in the above image.)

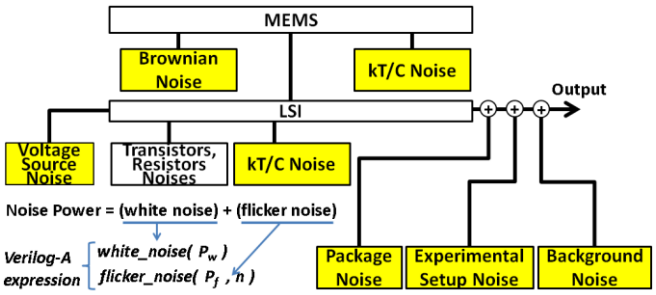

Fig. 2 Block diagram of noise sources in the CMOS-MEMS inertial sensor system; highlighted blocks are proposed in this work.

2. Electrical and Mechanical Noise Models

Figure 2 shows the block diagram of a capacitive CMOS-MEMS inertial sensor system with MEMS and electrical noise sources. The MEMS noise sources consist of mechanical Brownian noise and kT/C noise of a MEMS capacitor. On the other hand, the electrical noise sources include kT/C noise of built-in capacitors in LSI, voltage source, package, evaluation system, and background noises. We define the noise sources by noise equivalent models with a combination of white noise and flicker noise as

$$Noise\,power = \left[white\,noise\left(P_w\right)\right] + \left[flicker\,noise\left(P_f / f^n\right)\right], \qquad (1)$$

where P_w is a power of white noise and P_f is a power of flicker noise at 1 Hz which varies in proportion to $1/f^n$. Noise equivalent models are translated by Verilog-A

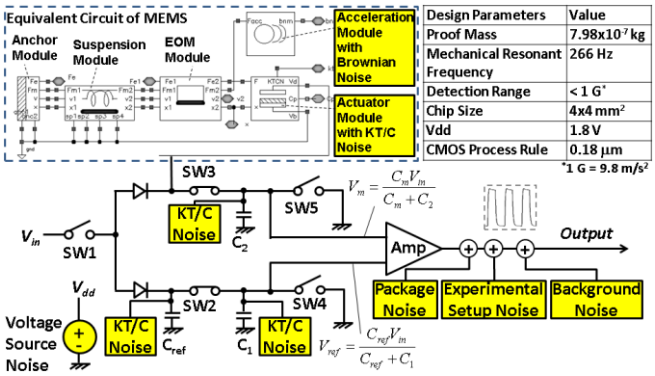

Design Parameters	Value
Proof Mass	7.98×10^{-7} kg
Mechanical Resonant Frequency	266 Hz
Detection Range	< 1 G*
Chip Size	4x4 mm²
Vdd	1.8 V
CMOS Process Rule	0.18 µm

*1 G = 9.8 m/s²

(a)

```
//Voltage Source Module
analog begin
if (wn==1)
  wnoise=white_noise(vddw*vddw)/sqrt(Fmax);
else
 wnoise=0;
if (fn==0)
  fnoise=flicker_noise(vddfa,vddfn)/sqrt(Fmax);
else
 fnoise=0;
 V(out)<+ vdd+wnoise+fnoise;
end
```

Calculate white noise (*Fmax* is bandwidth)

Calculate flicker noise

Output with noise

(b)

Fig. 3 Schematic image of the CMOS-MEMS inertial sensor with proposed noise circuit modules: (a) circuit schematic and design parameters, (b) Verilog-A expression in a voltage source module.

functions of *white_noise*(P_w) and *flicker_noise*(P_f, *n*). The MEMS noise equivalent models are embedded in an equivalent circuit of the capacitive MEMS inertial sensor. Electrical noise equivalent models are newly proposed as circuit modules in this work as shown in Fig. 3. Transient and AC noise analyses are performed to show both of electrical and mechanical noise characteristics simultaneously with the multi-physics simulation on a conventional circuit design environment.

3. Simulation and Experimental Results

Figure 4 shows the transient noise simulation results of the voltage source value and output voltage of the sensor LSI as a function of the input acceleration. The AC noise characteristics of the simulation with estimated noise parameters and experimental results of the CMOS-MEMS inertial sensor are shown in Fig. 5. These results revealed as follows; i) both the time domain and the frequency domain noise values could be calculated by the proposed noise models, and ii) simulation results of mechanical and electrical noise characteristics were consistent with the experimentally obtained values. Therefore, it is confirmed that our proposed method has a validity to analyze the electrical and mechanical noise characteristics for the CMOS-MEMS inertial sensor system.

4. Summary

We have proposed a novel noise analysis method for a capacitive CMOS-MEMS inertial sensor system. To calculate electrical and mechanical noise characteristics simultaneously, we used noise equivalent models with a combination of white noise and flicker noise. These models were translated into Verilog-A compatible hardware description

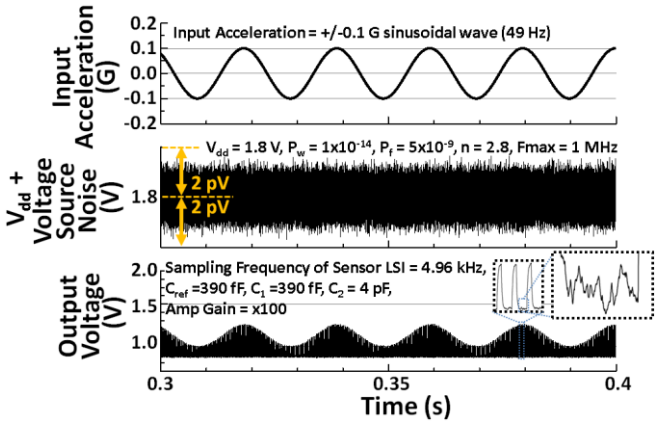

Fig. 4 Multi-physics simulation results of transient noise characteristics in the CMOS-MEMS inertial sensor.

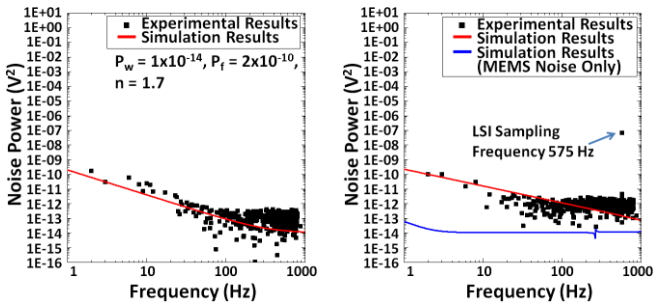

(a) (b)

Fig. 5 AC noise characteristics of simulation results and experimentally obtained results measured with a spectrum analyzer (Agilent Technologies, 4395A); (a) voltage source noise and (b) CMOS-MEMS noise.

language on a conventional circuit design environment. The results of the multi-physics simulation were consistent with those of experiments. The proposed method could play an important role in the design to suppress the noise for the highly sensitive capacitive CMOS-MEMS inertial sensor system.

Acknowledgements

The authors would like to thank Dr. Maruno, Dr. Akatsu, M. Yano, T. Safu, K, Kudo, M. Fujinuma, H. Nemoto, and C. Enomoto with NTT-AT for technical discussions. This work was supported by CREST, JST.

References

[1] S. –S. Tan, *et al.*, IEEE Trans. Circuits and Syst.-I, **58** (2011) 2661.

[2] D. Yamane, *et al.*, Jpn. J. Appl. Phys., **54** (2015) 087202.

[3] T. Konishi, *et al.*, *Extended Abstracts of the 2015 International Conference on Solid State Devices and Materials* (2015) 798.

[4] S. A. Maas, *Noise In Linear And Nonlinear Circuits* (Artech House, 2005) p. 26-28.

[5] M. Schwartz, *Information, Transmission, Modulation, and Noise*, (Mcgraw-Hill, 1970) 2nd ed., p. 518-569.

[6] O. Leman, F. Mailly, L. Latorre, and P. Nouet, Sens. Actuators A. Phys. **142** (2008) 178.

[7] K. Yoshikawa, K. Ichikawa, and M. Nagata, IEICE Trans. Electron., **E97-C** (2014) 264.