Extended Abstracts of the 2019 International Conference on Solid State Devices and Materials, Nagoya, 2019, pp539-540

Proposal of a Novel SPDT Switch and Duplexer Dual-Function Circuit

Hiroshi Mizutani[1], Ryo Ishikawa[2] and Kazuhiko Honjo[1]

[1] Salesian Polytechnic
4-6-8, Oyamagaoka, Machida
Tokyo 194-0215, Japan
Phone: +81-42-775-3020 E-mail: mizutani@salesio-sp.ac.jp
[2] Univ. of Electro-communications
1-5-1 Chofugaoka, Chofu
Tokyo 182-8585, Japan
Phone: +81- 424-43-5237

Abstract

A novel SPDT (Single Pole Double Throw) switch and duplexer dual-function circuit is proposed for low-cost 5G (the fifth generation) front-ends. The proposed circuit provides two functions such as a duplexer for FDD (frequency division duplex) operation and as an SPDT switch for TDD (time division duplex) by switching between LPF (low pass filter) and HPF (high pass filter) like characteristics electrically. A dual-function GaN (Gallium Nitride) MMIC (monolithic microwave integrated circuit) is successfully demonstrated by using 0.25 μm GaN foundry process for high power handling capability. The proposed dual-function circuit contributes to realizing low-cost 5G RF front-ends.

1. Introduction

In the era of IoT (Internet of Things), since everything connects to "the Cloud," tremendous data traffic needs to be transmitted in a moment. Especially, a lot of IoT devices such as sensors for agriculture or informatics devices for automotive communications connect to the Cloud by radio communications. For high-speed data transmissions, 5G wireless communications systems are expected as a powerful emerging wireless technology [1].

For 5G communications, sub-6-GHz and 28 GHz bands has been allocated in addition to 4G bands to improve data traffic speed. An introduction of carrier aggregation (CA) technique also has been considered as one of the other effective approaches for increasing its traffic speed, which operates multiple frequency bands concurrently [2].

Generally, an SPDT switch is dominantly used for TDD operation, and a duplexer is for FDD operation. If sub-6-GHz is the concurrent operation band with 28-GHz in TDD operation, a sub-6-GHz and 28-GHz dual-band SPDT switch is needed. In FDD CA operation, a duplexer is used. For the conventional approach, two kinds of components such as an SPDT switch and a duplexer are required for realizing TDD CA and FDD CA, respectively. As a result, the cost of 5G RF front-ends will be relatively higher. If a common component for both TDD CA and FDD CA would be introduced, lower cost can be achieved for RF front-ends.

In this paper, a novel SPDT switch and duplexer dual-function GaN MMIC will be proposed and demonstrated. For a 5G transmitter branch, since high power of more than several watts needs to be handled, active devices such as FETs must have high breakdown voltages. GaN is the most suitable materials for 5G applications.

2. Experimental

The circuit diagram of the proposed SPDT switch and duplexer dual-function circuit is shown in Fig.1. The combination of the control voltages is exchanged between series FETs and shunt FETs for each branch to switch transmission state. To ensure obtaining high isolation of more than 50 dB, two stages of the unit cell construct the proposed circuit. Furthermore, shunt stubs connected to shunt FETs introduce high isolation and low insertion loss for high-band such as millimeter-wave frequency.

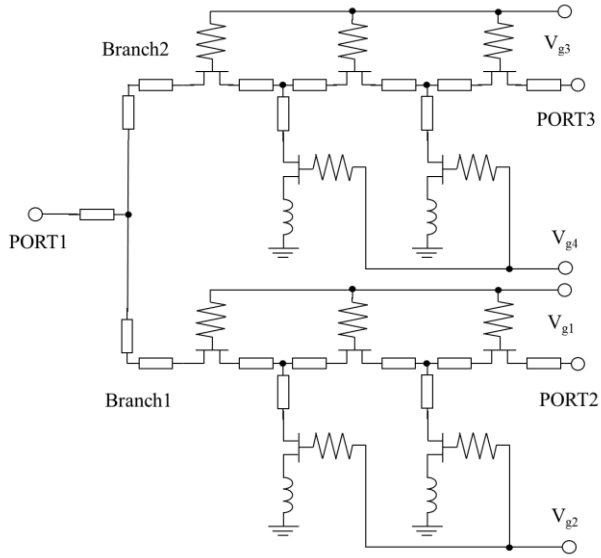

Fig. 1. Circuit diagram of proposed SPDT switch and duplexer dual-function circuit.

Fig.2 shows the simulated frequency response of the proposed dual-function circuit. The design parameters were assumed as described below. Off-capacitances of all FETs were set to 0.08 pF. On-resistances of all FETs were 4 ohms. These parameters were estimated for GaN FET in advance. For high band around 28 GHz, low insertion loss for S_{21} was obtained by short stub with an open-channel shunt FET. High isolation for S_{31} around 28 GHz was achieved by LC resonance in the shunt circuit. L is derived from a shunt transmission line. C is originated from a pinched-off shunt

FET. Low insertion losses of 1.0 dB were observed for branch1 at 28 GHz and for branch2 at 4.5 GHz. High isolations of more than 80 dB and 100 dB were obtained for branch1 at 4.5 GHz and for branch2 at 28 GHz, respectively.

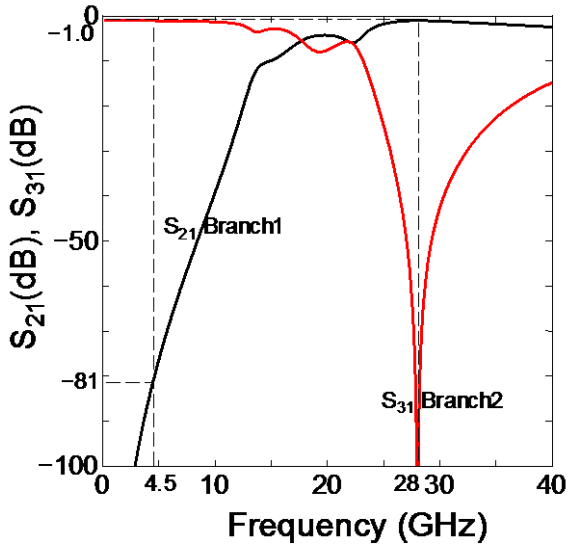

Fig. 2. Simulated S_{21}, S_{31} of SPDT switch and duplexer dual-function circuit with respect to frequency.

An SPDT switch and a duplexer dual-function GaN MMIC has been developed by using the foundry service of WIN Semiconductor, whose process name is PP25-00 for 0.25 μm GaN high electron mobility transistor (HEMT).

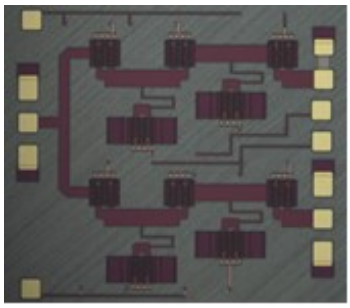

Fig. 3. Photomicrograph of demonstrated SPDT switch and duplexer dual-function GaN MMIC.

Fig.3 shows the photomicrograph of demonstrated SPDT switch and duplexer dual-function GaN MMIC. The gate widths of all FETs were 4 x 125 μm. The chip size was 1.53 mm x 1.41 mm.

The small signal S-parameters of the demonstrated SPDT switch and duplexer dual-function GaN MMIC were measured by using network analyzer Agilent E8364B from 10 MHz to 40 GHz. Fig.4 shows the measured S_{21} and S_{31} frequency response of demonstrated SPDT switch and duplexer dual-function GaN MMIC. Due to two port measurement, a remaining port was terminated by 50 ohms. S_{31} could not be measured at the same time. The measured insertion losses were increased up to 4.6 dB at 28 GHz for branch1 and up to 3.5 dB at 4.5 GHz for branch2 as compared with the simulation results. The LC resonant frequency of the shunt circuit in branch2 lowered up to 10.1 GHz compared with simulation results. The cause of the difference between simulated and measured data is estimated as the inaccuracy of GaN FET parameters for switch circuits.

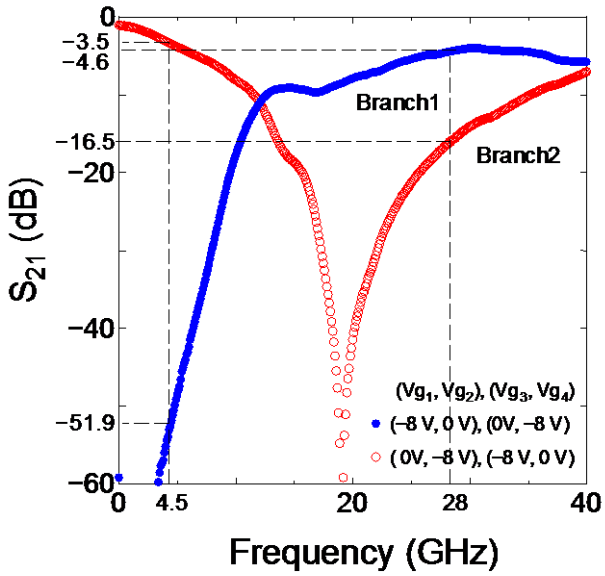

Fig. 4. Measured transmission frequency response of demonstrated SPDT switch and duplexer dual-function GaN MMIC.

Table II shows the summary of function variation with respect to control voltage sets. The demonstrated MMIC successfully indicated an SPDT switch function or a duplexer function by changing the control voltage set.

Table II Function variation with respect to control voltage sets

Function 1	Vg_1	Vg_2	Vg_3	Vg_4	Branch1		Branch2		Function2
	V				LB	HB	LB	HB	
SPDT switch	0	-8	-8	0	ON	OFF	OFF	ON	Duplexer1
	-8	0	0	-8	OFF	ON	ON	OFF	Duplexer2

3. Conclusions

The novel dual-function GaN MMIC was proposed and successfully demonstrated by using GaN foundry process. The demonstrated GaN MMIC provided electrically function selectable characteristics between SPDT switch and duplexer. Further improvements for the insertion losses and the isolations at 4.5 GHz and 28 GHz are expected by refining accuracy of GaN FET parameters. The proposed SPDT switch and duplexer dual-function GaN MMIC will contribute to realizing low-cost 5G RF front-end.

Acknowledgements

This work was supported by JSPS KAKENHI Grant Number 17K06407.

References

[1] S.Talwar, D.Choudhury, K.Dimou, E.Aryafar, B. Bangerter, and K.Stewart, "Enabling Technologies and Architectures for 5G Wireless," *2014 IEEE MTT-S International Microwave Symposium Digest.*, vol. 10, pp. 1–4, June 2014.

[2] E. Schmidhammer, T. Metzger, and C. Hoffmann, "Multiplexers: a necessary extension for 4G/5G sytems," *2016 IEEE MTT-S International Microwave Symposium Digest.*, pp. 1–4, May 2016.

[3] H.Mizutani, R.Ishikawa, and K.Honjo, "A Novel Two-Dimensional Changeover GaN MMIC Switch for Electrically Selectable SPDT Multifunctional Device," *Proceedings of 2017 IEEE Compound Semiconductor Integrated Circuit Symposium (CSICS)*, L-4, pp.1-4, Miami, October 2017.